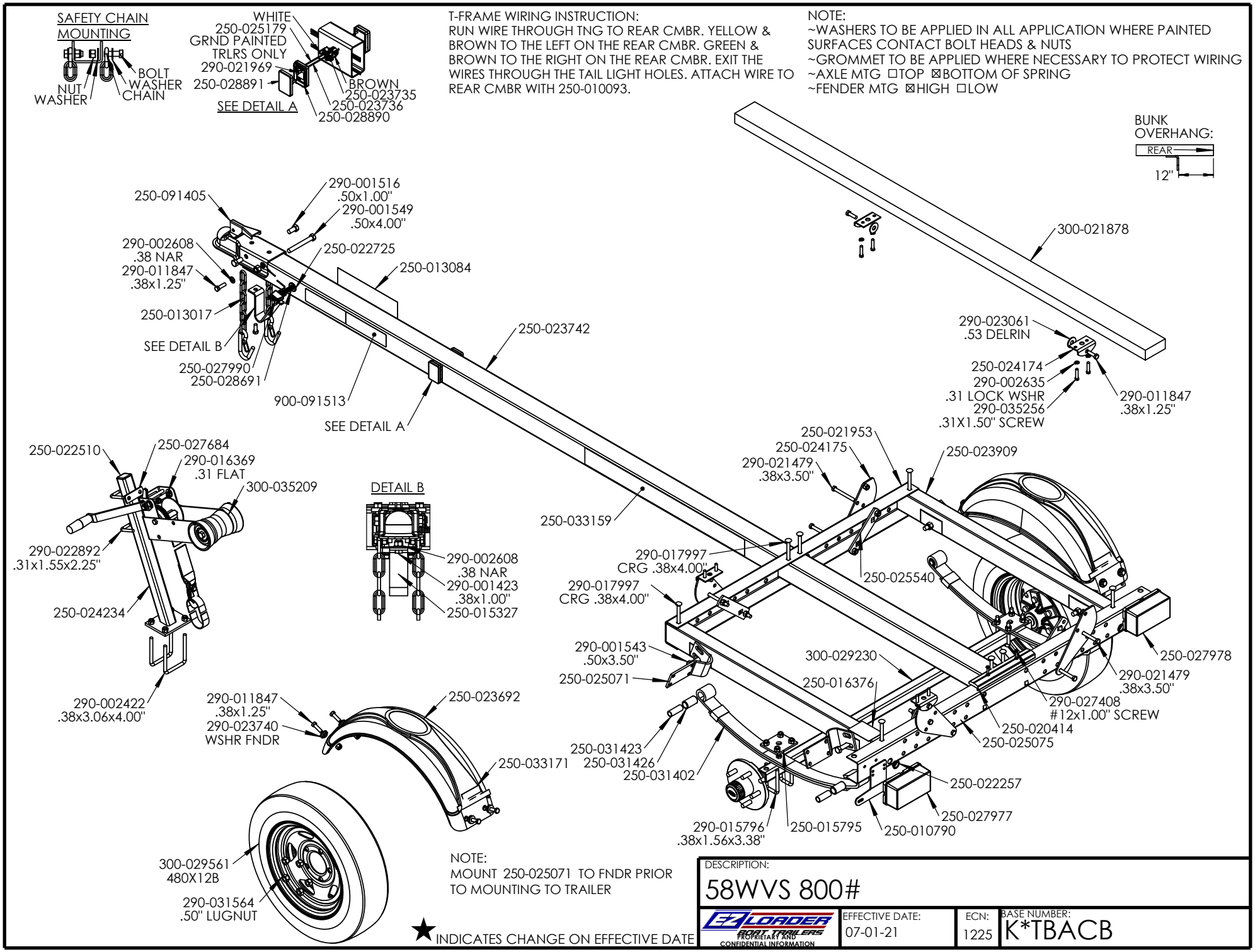
SAFETY CHAIN MOUNTING
BOLT
WASHER
CHAIN
NUT
WASHER
WHITE
250-025179
GRND PAINTED
TRLRS ONLY
290-021969
250-028891
SEE DETAIL A
BROWN
250-023735
250-023736
250-028890
T-FRAME WIRING INSTRUCTION:
RUN WIRE THROUGH TNG TO REAR CMBR. YELLOW & BROWN TO THE LEFT ON THE REAR CMBR. GREEN & BROWN TO THE RIGHT ON THE REAR CMBR. EXIT THE WIRES THROUGH THE TAIL LIGHT HOLES. ATTACH WIRE TO REAR CMBR WITH 250-010093.
NOTE:
~WASHERS TO BE APPLIED IN ALL APPLICATION WHERE PAINTED SURFACES CONTACT BOLT HEADS & NUTS
~GROMMET TO BE APPLIED WHERE NECESSARY TO PROTECT WIRING
~AXLE MTG ☐TOP ☒BOTTOM OF SPRING
~FENDER MTG ☒HIGH ☐LOW
BUNK OVERHANG:
REAR
12"
300-021878
250-091405
290-001516
.50x1.00"
290-001549
.50x4.00"
290-002608
.38 NAR
290-011847
.38x1.25"
250-022725
250-013084
250-013017
SEE DETAIL B
250-027990
250-028691
900-091513
250-023742
SEE DETAIL A
290-023061
.53 DELRIN
250-024174
290-002635
.31 LOCK WSHR
290-035256
.31X1.50" SCREW
290-011847
.38x1.25"
250-022510
250-027684
290-016369
.31 FLAT
300-035209
290-022892
.31x1.55x2.25"
250-024234
290-002422
.38x3.06x4.00"
DETAIL B
290-002608
.38 NAR
290-001423
.38x1.00"
250-015327
250-021953
250-024175
290-021479
.38x3.50"
250-023909
250-033159
290-017997
CRG .38x4.00"
290-017997
CRG .38x4.00"
250-025540
290-001543
.50x3.50"
250-025071
300-029230
250-016376
250-027978
290-021479
.38x3.50"
290-027408
#12x1.00" SCREW
250-020414
250-025075
290-011847
.38x1.25"
290-023740
WSHR FNDR
250-023692
250-033171
250-031423
250-031426
250-031402
250-022257
250-027977
290-015796
.38x1.56x3.38"
250-015795
250-010790
300-029561
480X12B
290-031564
.50" LUGNUT
NOTE:
MOUNT 250-025071 TO FNDR PRIOR TO MOUNTING TO TRAILER
★ INDICATES CHANGE ON EFFECTIVE DATE
DESCRIPTION:
58WVS 800#
EZ LOADER BOAT TRAILERS
PROPRIETARY AND CONFIDENTIAL INFORMATION
EFFECTIVE DATE:
07-01-21
ECN:
1225
BASE NUMBER:
K*TBACB