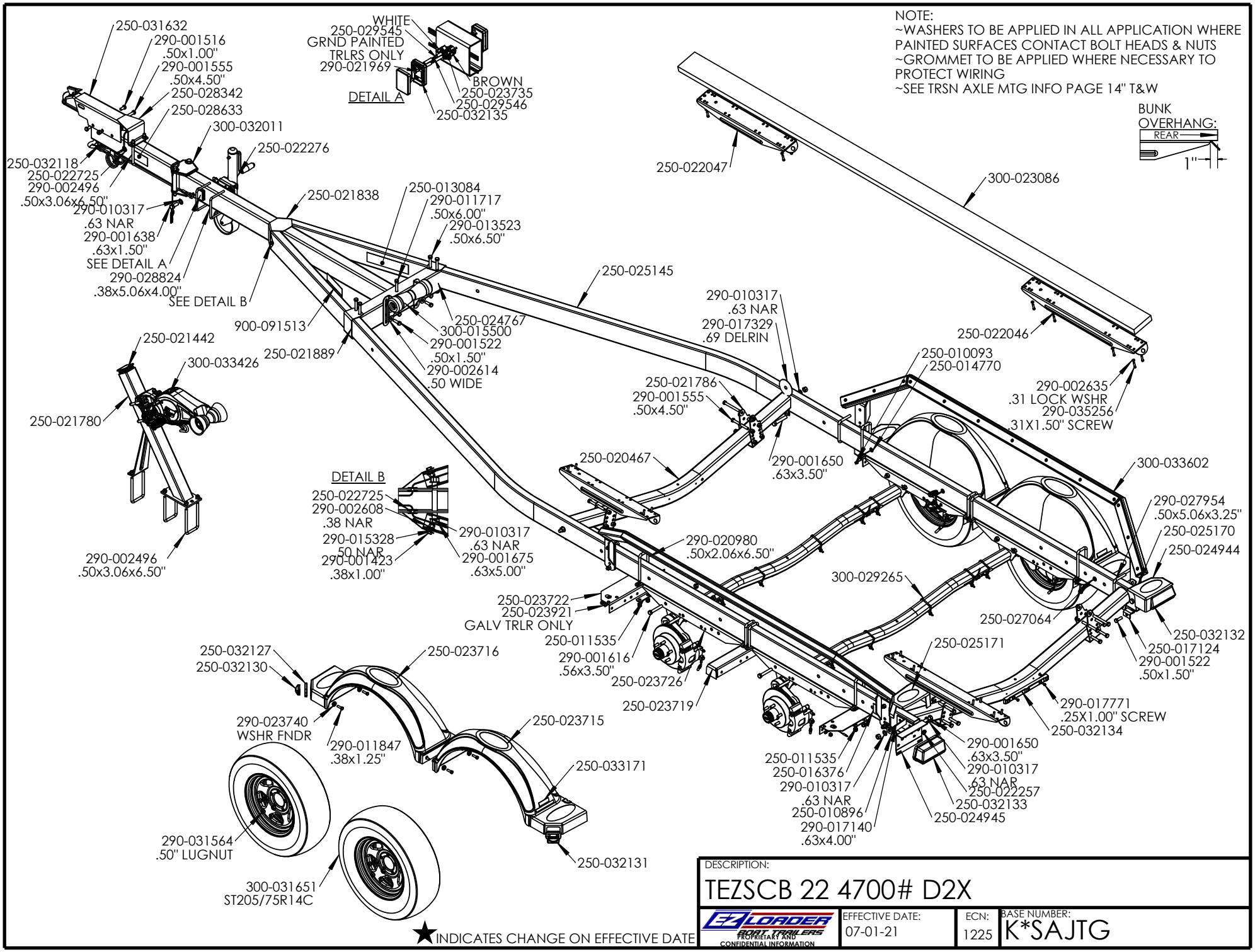
NOTE:
~WASHERS TO BE APPLIED IN ALL APPLICATION WHERE PAINTED SURFACES CONTACT BOLT HEADS & NUTS
~GROMMET TO BE APPLIED WHERE NECESSARY TO PROTECT WIRING
~SEE TRSN AXLE MTG INFO PAGE 14" T&W
BUNK OVERHANG:
REAR
1"
250-031632
290-001516 .50x1.00"
290-001555 .50x4.50"
250-028342
250-028633
300-032011
250-022276
250-032118
250-022725
290-002496 .50x3.06x6.50"
290-010317 .63 NAR
290-001638 .63x1.50"
SEE DETAIL A
290-028824 .38x5.06x4.00"
SEE DETAIL B
250-021838
250-013084
290-011717 .50x6.00"
290-013523 .50x6.50"
WHITE
250-029545
GRND PAINTED TRLRS ONLY
290-021969
DETAIL A
BROWN
250-023735
250-029546
250-032135
250-022047
300-023086
250-025145
290-010317 .63 NAR
290-017329 .69 DELRIN
250-022046
250-010093
250-014770
290-002635 .31 LOCK WSHR
290-035256 .31X1.50" SCREW
900-091513
250-021889
250-024767
300-015500
290-001522 .50x1.50"
290-002614 .50 WIDE
250-021442
300-033426
250-021780
250-021786
290-001555 .50x4.50"
290-001650 .63x3.50"
250-020467
300-033602
DETAIL B
250-022725
290-002608 .38 NAR
290-015328 .50 NAR
290-001423 .38x1.00"
290-010317 .63 NAR
290-001675 .63x5.00"
290-027954 .50x5.06x3.25"
250-025170
250-024944
290-020980 .50x2.06x6.50"
290-002496 .50x3.06x6.50"
300-029265
250-023722
250-023921
GALV TRLR ONLY
250-011535
290-001616 .56x3.50"
250-023726
250-023719
250-027064
250-032132
250-017124
290-001522 .50x1.50"
250-025171
250-032127
250-032130
250-023716
290-023740 WSHR FNDR
290-011847 .38x1.25"
250-023715
250-033171
290-017771 .25X1.00" SCREW
250-032134
290-001650 .63x3.50"
250-011535
250-016376
290-010317 .63 NAR
290-010317 .63 NAR
250-022257
250-032133
250-010896
290-017140 .63x4.00"
250-024945
290-031564 .50" LUGNUT
300-031651 ST205/75R14C
250-032131
★INDICATES CHANGE ON EFFECTIVE DATE
DESCRIPTION:
TEZSCB 22 4700# D2X
EZ LOADER BOAT TRAILERS
PROPRIETARY AND CONFIDENTIAL INFORMATION
EFFECTIVE DATE:
07-01-21
ECN:
1225
BASE NUMBER:
K*SAJTG

NOTE:
~APPLY 250-033537 COPPER GASKETS TO ALL FLARED FITTINGS
~SEE ASSEMBLY INFORMATION/UFP DISC BRAKES
~PULL 250-026782 AS TIGHT & CLOSE TO THE TORSION BRKT AS POSSIBLE

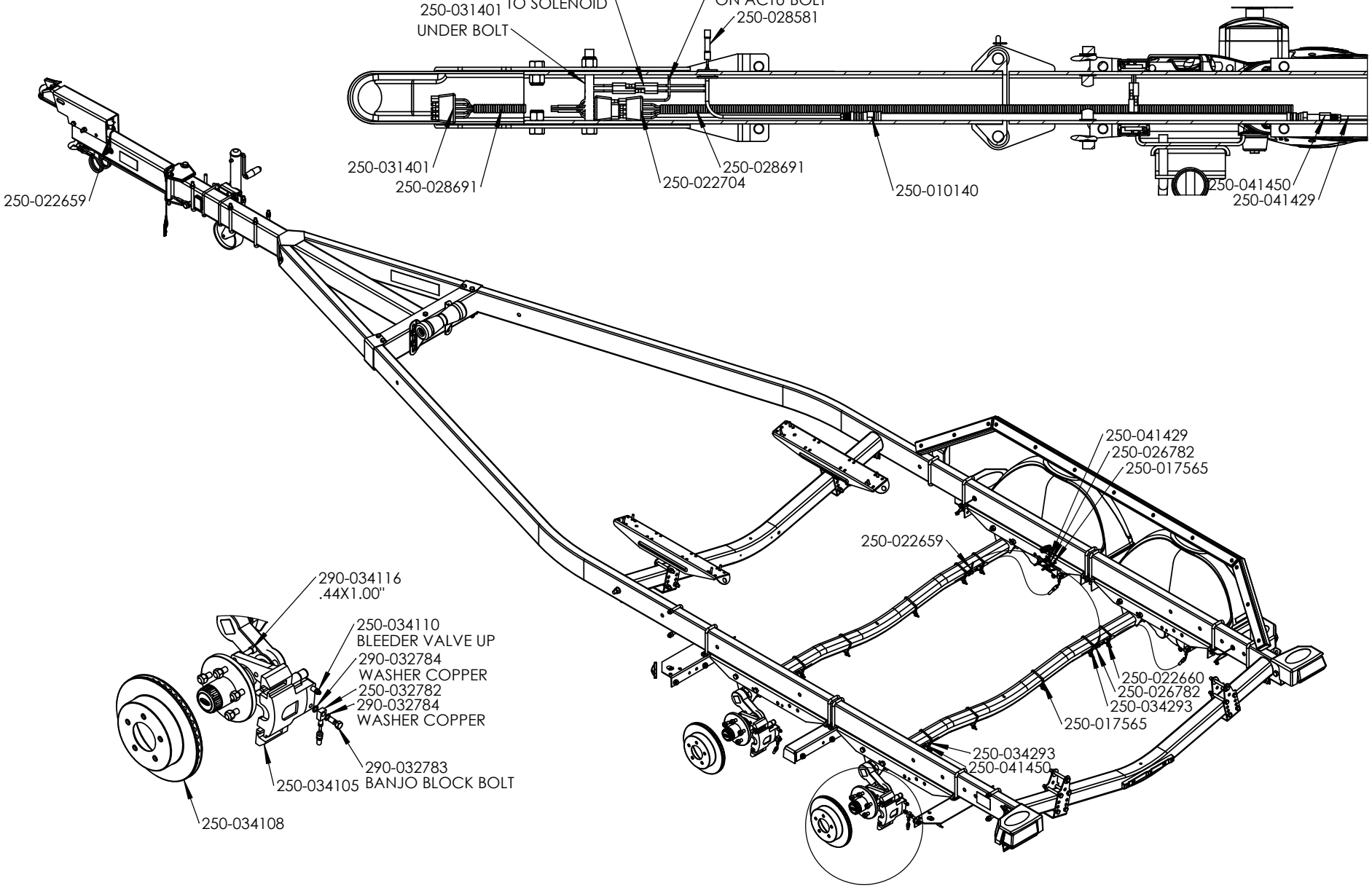

★ INDICATES CHANGE ON EFFECTIVE DATE

DESCRIPTION:
TEZSCB 22 4700# D2X

EZ LOADER BOAT TRAILERS
PROPRIETARY AND CONFIDENTIAL INFORMATION

EFFECTIVE DATE:	ECN:	BASE NUMBER:
07-01-21	1225	K*SAJTG