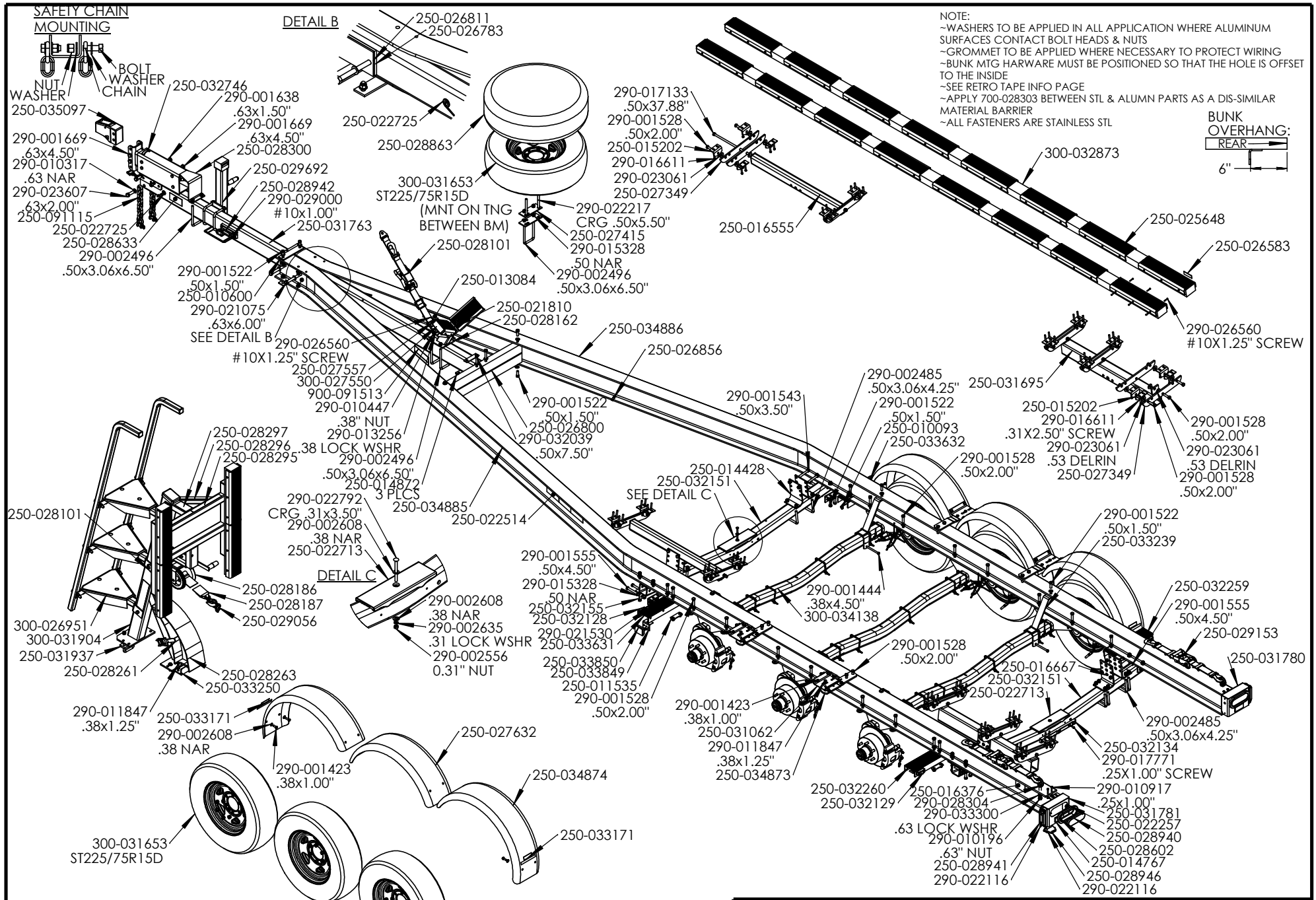

DESCRIPTION:

TIASB 25 11500# D3X

EZ LOADER BOAT TRAILERS
PROPRIETARY AND CONFIDENTIAL INFORMATION

EFFECTIVE DATE:	ECN:	BASE NUMBER:
07-01-21	1225	K*ZLF3M

★ INDICATES CHANGE ON EFFECTIVE DATE

NOTE:
~APPLY 250-033537 COPPER GASKET TO ALL FLARED FITTINGS
~SEE ASSEMBLY INFORMATION/UFP DISC BRAKES
~PULL 250-026782 AS TIGHT & CLOSE TO THE TORSION BRACKET AS POSSIBLE

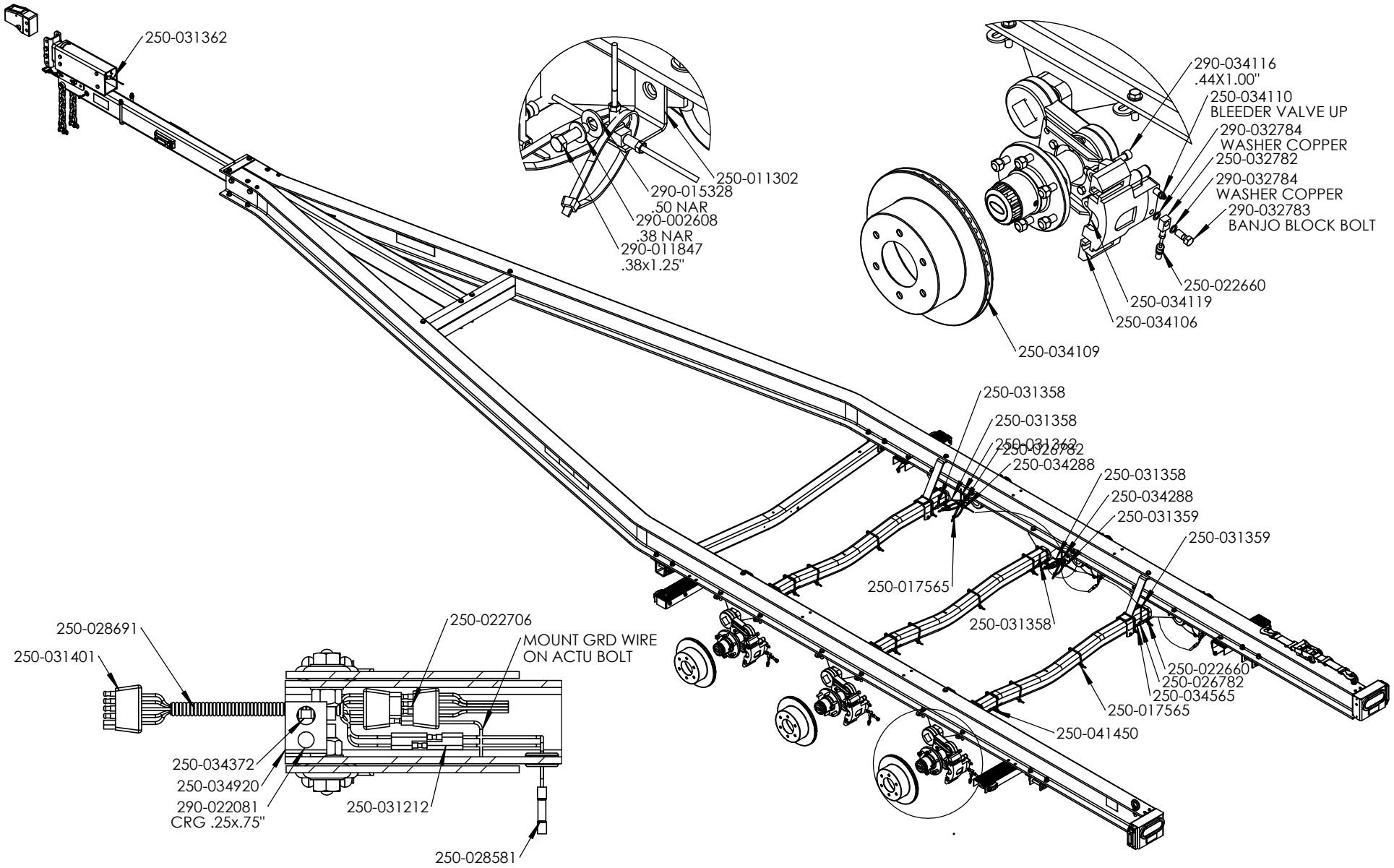

★ INDICATES CHANGE ON EFFECTIVE DATE

DESCRIPTION:
TIASB 25 11500# D3X

EZ LOADER BOAT TRAILERS
PROPRIETARY AND CONFIDENTIAL INFORMATION

EFFECTIVE DATE:	ECN:	BASE NUMBER:
07-01-21	1225	K*ZLF3M

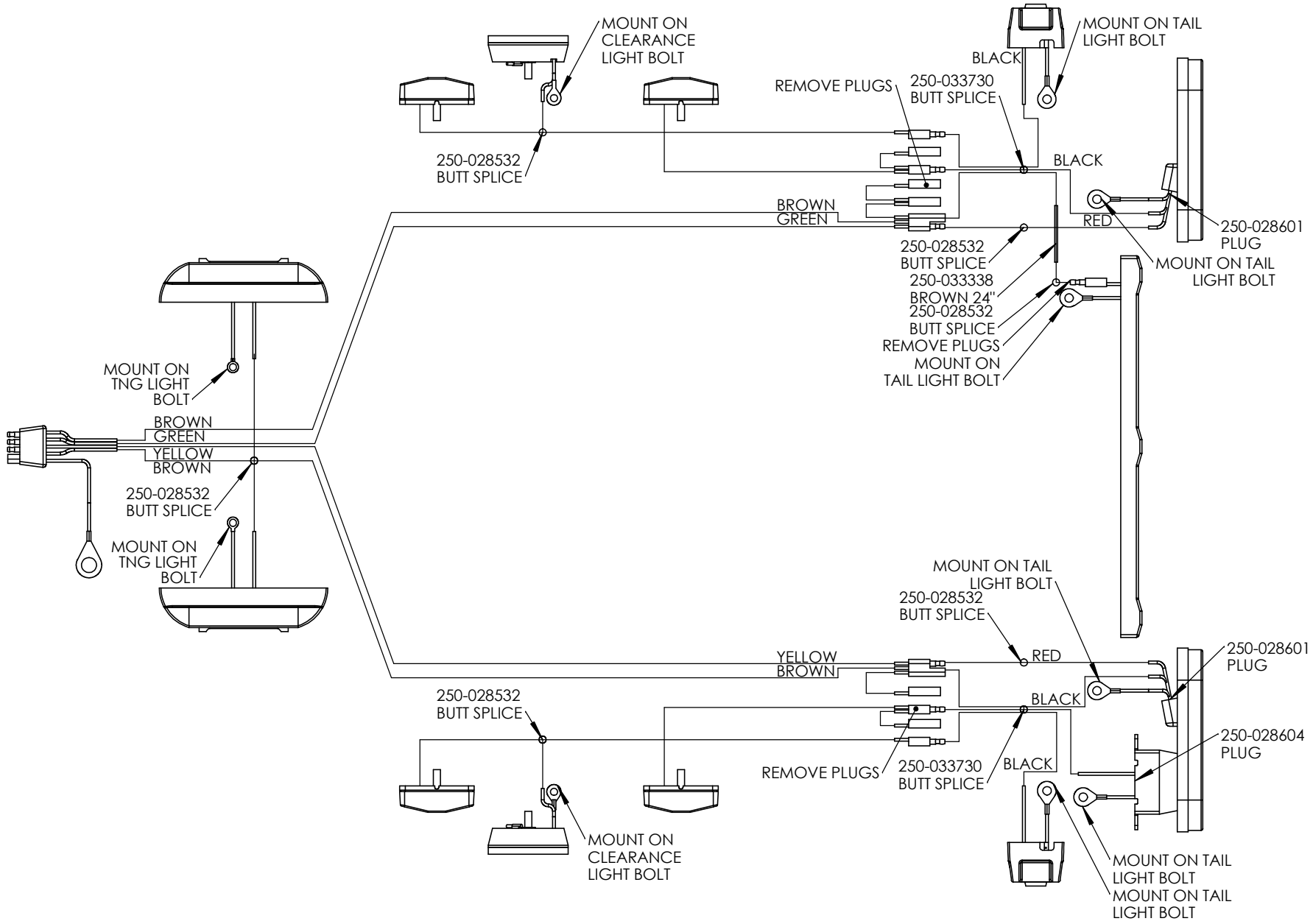

★ INDICATES CHANGE ON EFFECTIVE DATE

DESCRIPTION:

TIASB 25 11500# D3X

EZ LOADER BOAT TRAILERS

PROPRIETARY AND CONFIDENTIAL INFORMATION

EFFECTIVE DATE:	ECN:	BASE NUMBER:
07-01-21	1225	K*ZLF3M