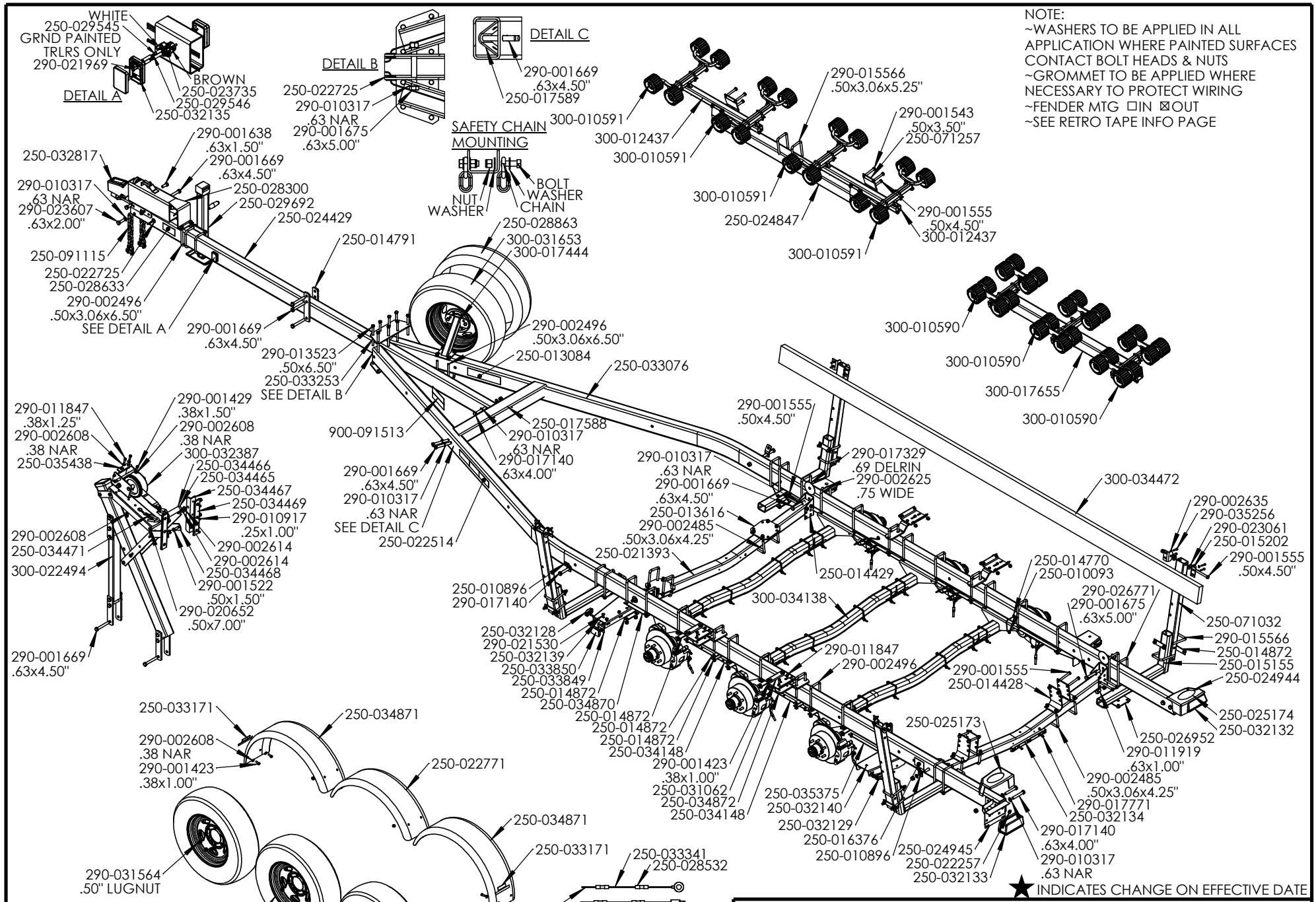

DESCRIPTION:

TIEZR 26K 9500# D3X

EZ LOADER BOAT TRAILERS PROPRIETARY AND CONFIDENTIAL INFORMATION	EFFECTIVE DATE: 07-01-21	ECN: 1225	BASE NUMBER: K*ZDU2M

NOTE:
~APPLY 250-033537 COPPER GASKETS TO ALL FLARED FITTINGS
~SEE ASSEMBLY INFORMATION/UFP DISC BRAKES
~PULL 250-026782 AS TIGHT & CLOSE TO THE TORSION BRACKET AS POSSIBLE

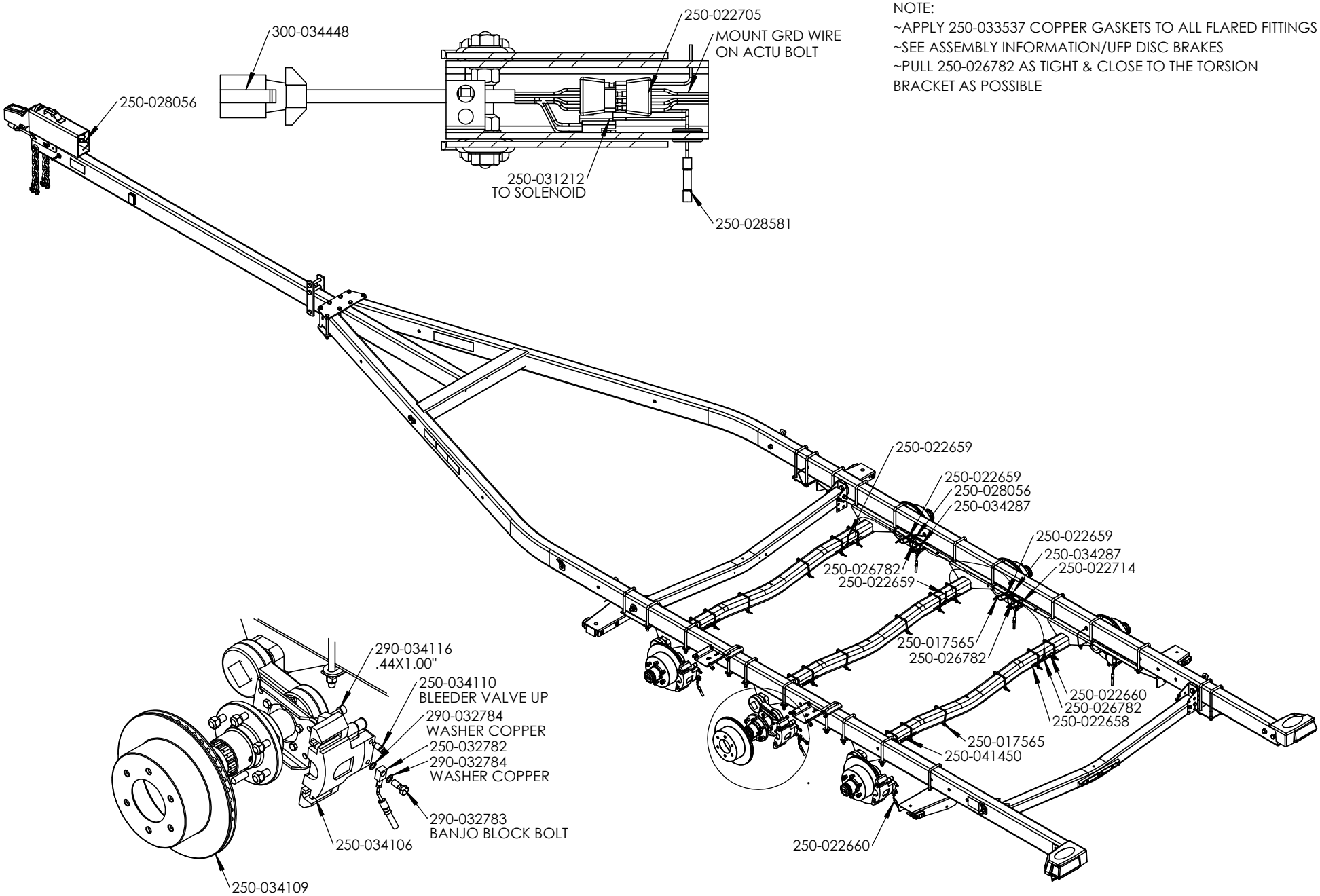

★ INDICATES CHANGE ON EFFECTIVE DATE

DESCRIPTION:			
TIEZR 26K 9500# D3X			
EZ LOADER BOAT TRAILERS PROPRIETARY AND CONFIDENTIAL INFORMATION	EFFECTIVE DATE: 07-01-21	ECN: 1225	BASE NUMBER: K*ZDU2M