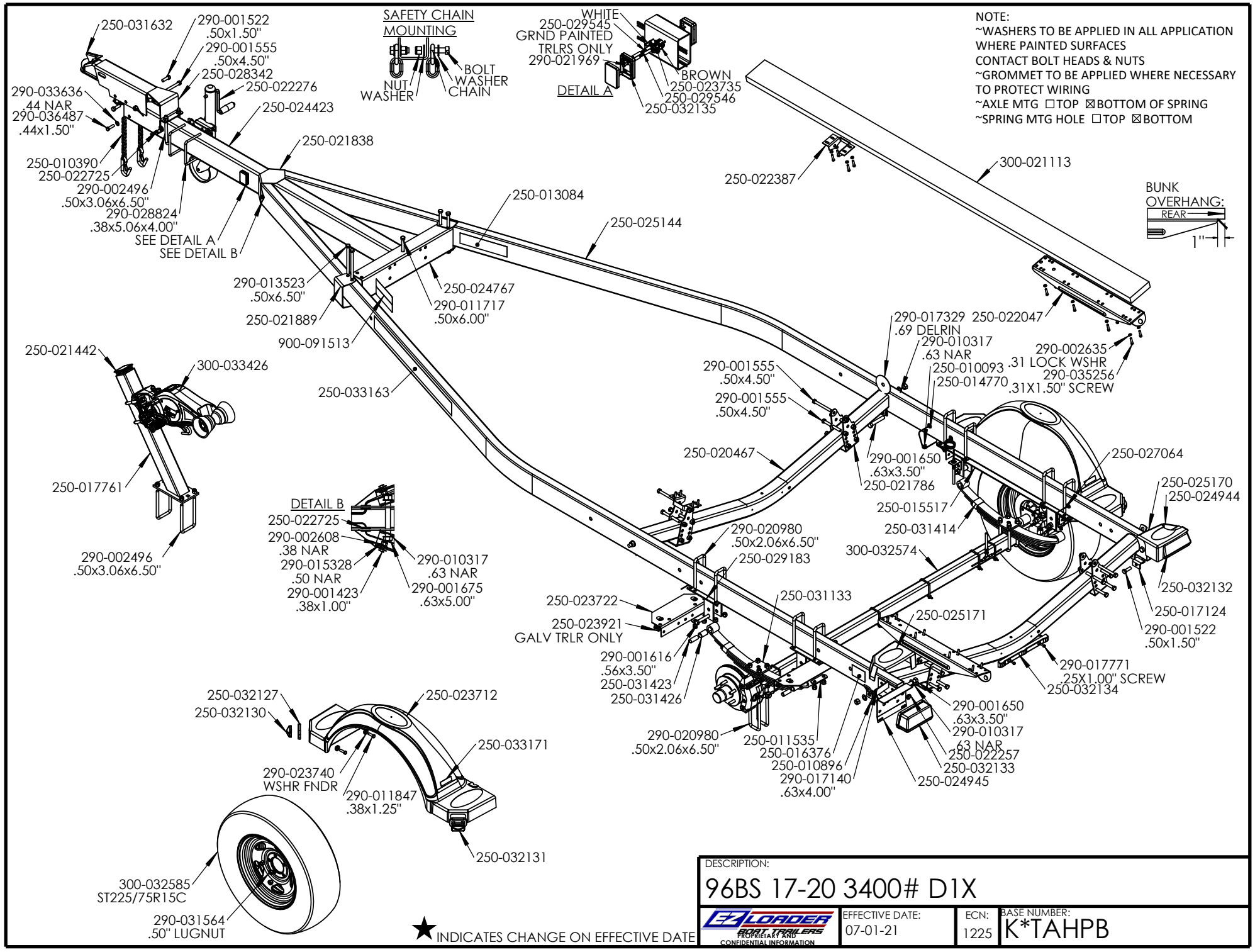
NOTE:
~WASHERS TO BE APPLIED IN ALL APPLICATION WHERE PAINTED SURFACES CONTACT BOLT HEADS & NUTS
~GROMMET TO BE APPLIED WHERE NECESSARY TO PROTECT WIRING
~AXLE MTG ☐TOP ☒BOTTOM OF SPRING
~SPRING MTG HOLE ☐TOP ☒BOTTOM
SAFETY CHAIN MOUNTING
NUT
WASHER
BOLT
WASHER
CHAIN
DETAIL A
WHITE
250-029545
GRND PAINTED TRLRS ONLY
290-021969
BROWN
250-023735
250-029546
250-032135
BUNK OVERHANG:
REAR
1"
250-031632
290-001522 .50x1.50"
290-001555 .50x4.50"
250-028342
250-022276
290-033636 .44 NAR
290-036487 .44x1.50"
250-024423
250-021838
250-010390
250-022725
290-002496 .50x3.06x6.50"
290-028824 .38x5.06x4.00"
SEE DETAIL A
SEE DETAIL B
250-013084
250-025144
250-022387
300-021113
290-013523 .50x6.50"
250-024767
290-011717 .50x6.00"
250-021889
900-091513
250-021442
300-033426
250-033163
290-017329 .69 DELRIN
250-022047
290-010317 .63 NAR
290-002635 .31 LOCK WSHR
250-010093
250-014770
290-035256 .31X1.50" SCREW
290-001555 .50x4.50"
290-001555 .50x4.50"
250-020467
290-001650 .63x3.50"
250-021786
250-027064
250-017761
DETAIL B
250-022725
290-002608 .38 NAR
290-015328 .50 NAR
290-001423 .38x1.00"
290-010317 .63 NAR
290-001675 .63x5.00"
290-002496 .50x3.06x6.50"
250-015517
250-031414
250-025170
250-024944
290-020980 .50x2.06x6.50"
250-029183
300-032574
250-032132
250-023722
250-031133
250-025171
250-017124
250-023921 GALV TRLR ONLY
290-001522 .50x1.50"
290-001616 .56x3.50"
250-031423
250-031426
290-017771 .25X1.00" SCREW
250-032134
250-032127
250-032130
250-023712
250-033171
290-001650 .63x3.50"
290-010317 .63 NAR
290-020980 .50x2.06x6.50"
250-011535
250-016376
250-010896
290-017140 .63x4.00"
250-022257
250-032133
250-024945
290-023740 WSHR FNDR
290-011847 .38x1.25"
250-032131
300-032585 ST225/75R15C
290-031564 .50" LUGNUT
★ INDICATES CHANGE ON EFFECTIVE DATE
DESCRIPTION:
96BS 17-20 3400# D1X
EZ LOADER BOAT TRAILERS
PROPRIETARY AND CONFIDENTIAL INFORMATION
EFFECTIVE DATE:
07-01-21
ECN:
1225
BASE NUMBER:
K*TAHPB

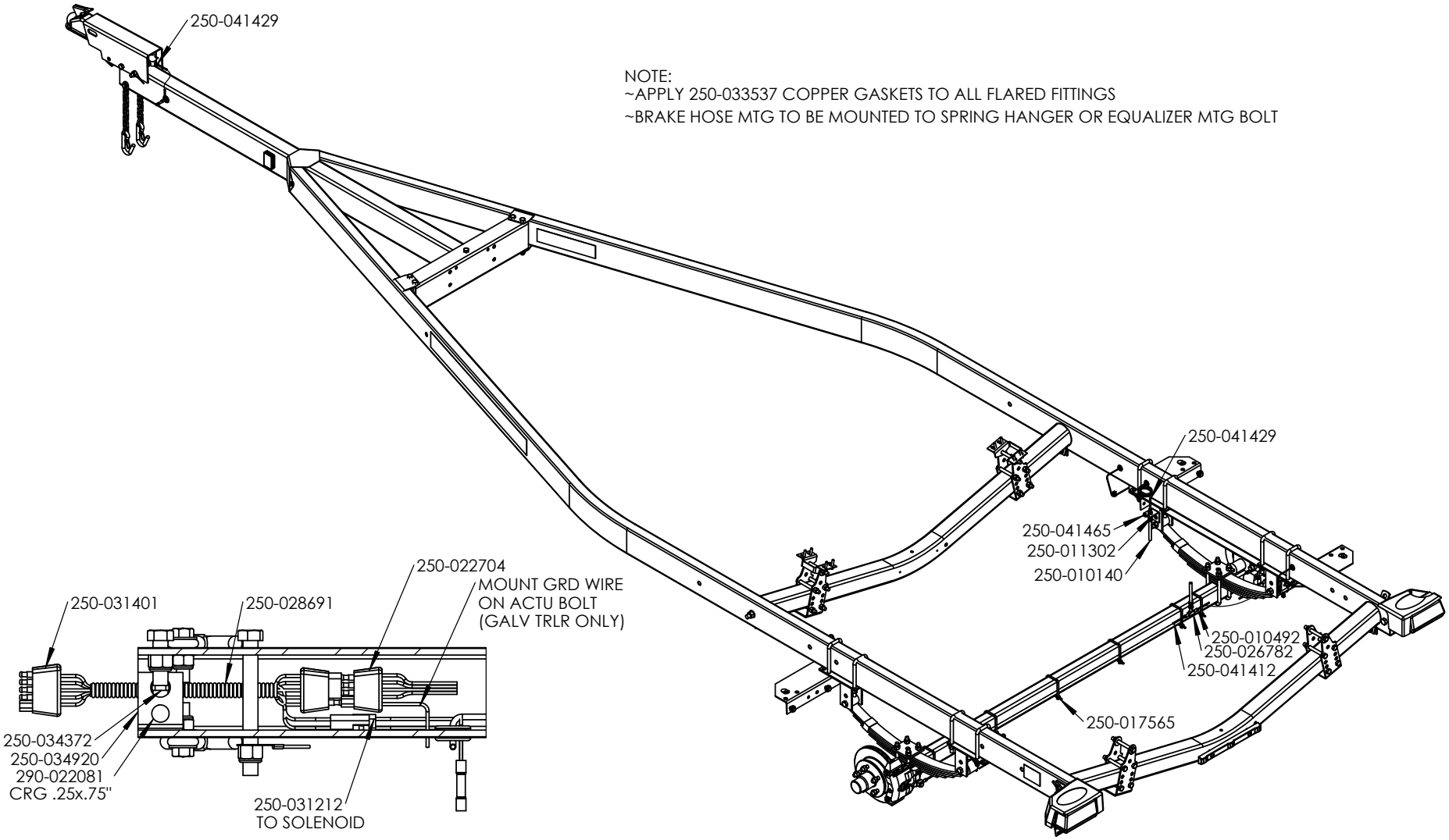

★ INDICATES CHANGE ON EFFECTIVE DATE

DESCRIPTION:			
96BS 17-20 3400# D1X			
EZ LOADER BOAT TRAILERS PROPRIETARY AND CONFIDENTIAL INFORMATION	EFFECTIVE DATE: 07-01-21	ECN: 1225	BASE NUMBER: K*TAHPB