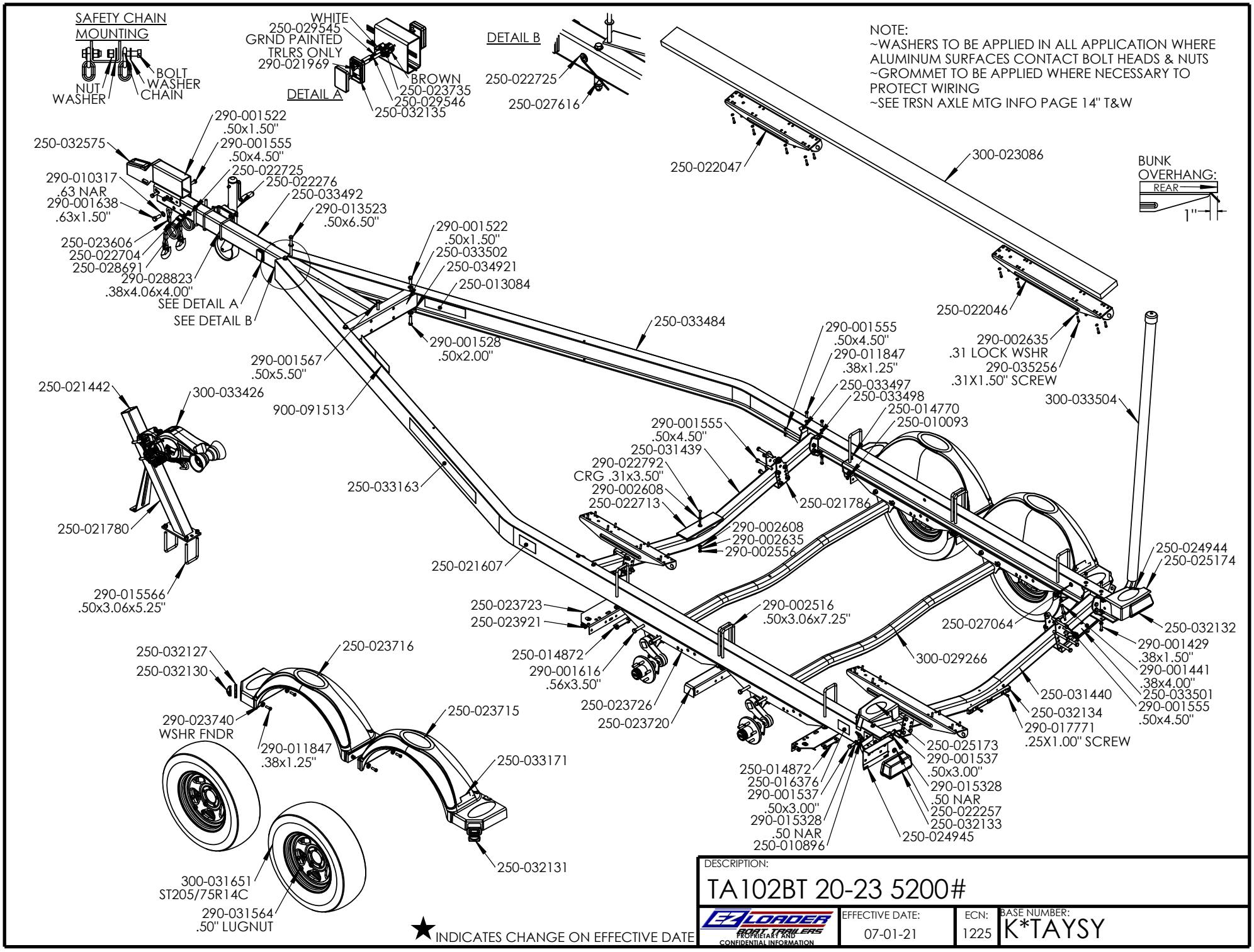

★ INDICATES CHANGE ON EFFECTIVE DATE

DESCRIPTION:

TA102BT 20-23 5200#

EZ LOADER BOAT TRAILERS
PROPRIETARY AND CONFIDENTIAL INFORMATION

EFFECTIVE DATE:	ECN:	BASE NUMBER:
07-01-21	1225	K*TAYSY