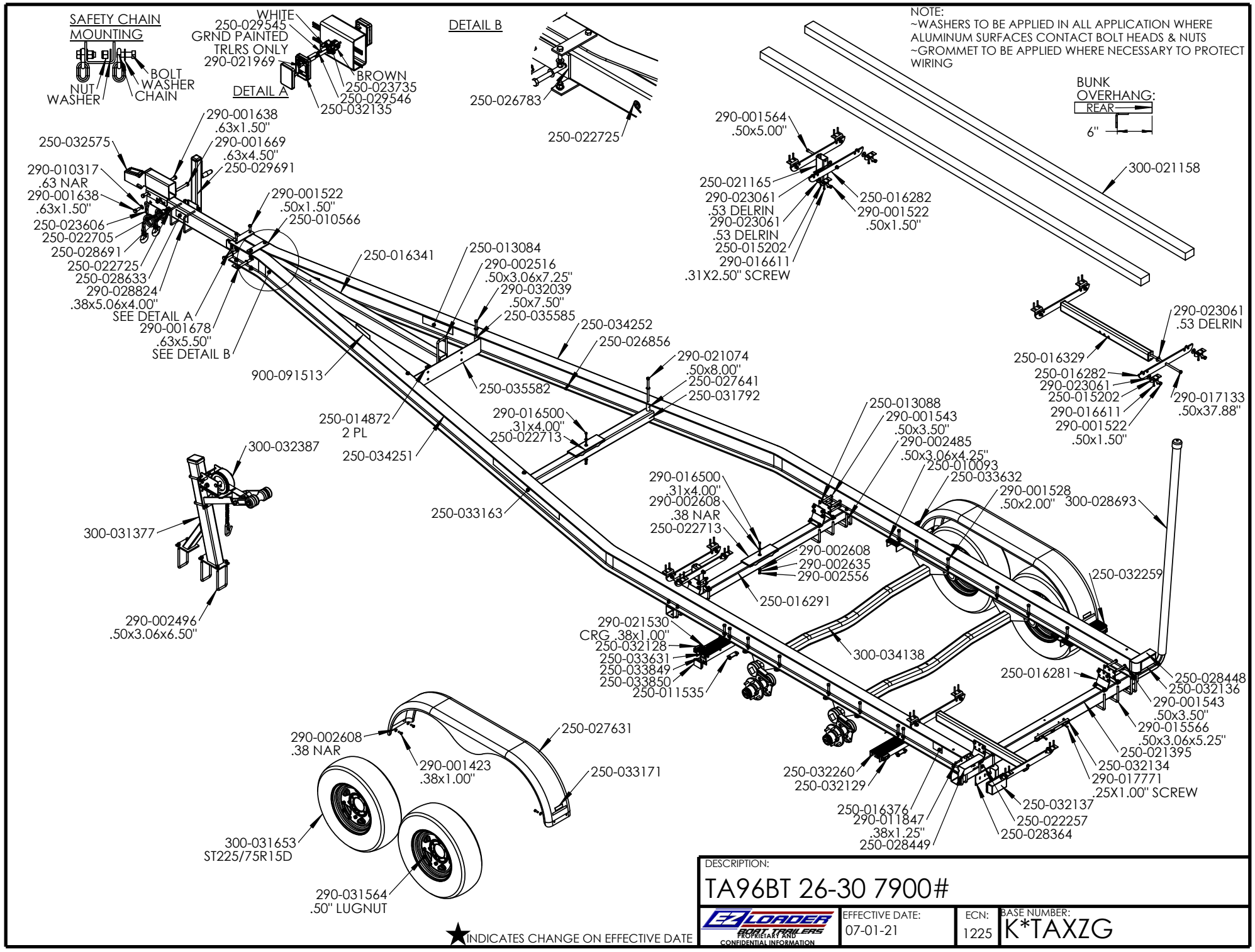

DESCRIPTION:

TA96BT 26-30 7900#

EZ LOADER BOAT TRAILERS
PROPRIETARY AND CONFIDENTIAL INFORMATION

EFFECTIVE DATE: 07-01-21

ECN: 1225

BASE NUMBER: K*TAXZG

★ INDICATES CHANGE ON EFFECTIVE DATE