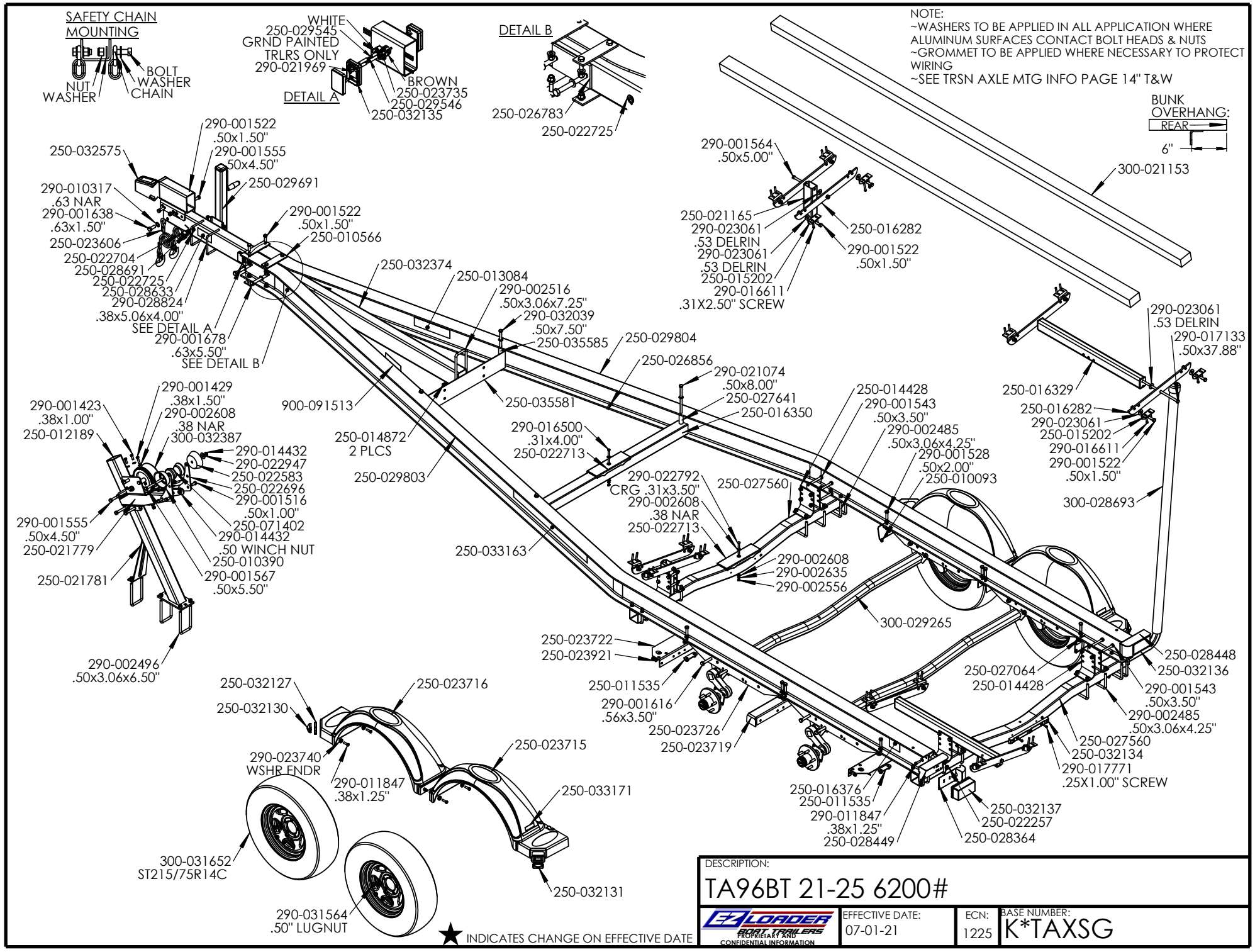
SAFETY CHAIN MOUNTING
BOLT
WASHER
CHAIN
NUT
WASHER
WHITE
250-029545
GRND PAINTED
TRLRS ONLY
290-021969
BROWN
250-023735
250-029546
250-032135
DETAIL A
DETAIL B
250-026783
250-022725
NOTE:
~WASHERS TO BE APPLIED IN ALL APPLICATION WHERE ALUMINUM SURFACES CONTACT BOLT HEADS & NUTS
~GROMMET TO BE APPLIED WHERE NECESSARY TO PROTECT WIRING
~SEE TRSN AXLE MTG INFO PAGE 14" T&W
BUNK OVERHANG:
REAR
6"
300-021153
290-001522
.50x1.50"
250-032575
290-001555
50x4.50"
250-029691
290-010317
.63 NAR
290-001638
.63x1.50"
250-023606
250-022704
250-028691
250-022725
250-028633
290-028824
.38x5.06x4.00"
SEE DETAIL A
290-001678
.63x5.50"
SEE DETAIL B
290-001522
.50x1.50"
250-010566
250-032374
250-013084
290-002516
.50x3.06x7.25"
290-032039
.50x7.50"
250-035585
250-029804
250-026856
290-021074
.50x8.00"
250-027641
250-016350
290-001564
.50x5.00"
250-021165
290-023061
.53 DELRIN
290-023061
.53 DELRIN
250-015202
290-016611
.31X2.50" SCREW
250-016282
290-001522
.50x1.50"
290-023061
.53 DELRIN
290-017133
.50x37.88"
250-016329
250-016282
290-023061
250-015202
290-016611
290-001522
.50x1.50"
300-028693
290-001429
.38x1.50"
290-001423
.38x1.00"
290-002608
.38 NAR
250-012189
300-032387
290-014432
290-022947
250-022583
250-022696
290-001516
.50x1.00"
250-071402
290-014432
.50 WINCH NUT
250-010390
290-001567
.50x5.50"
290-001555
.50x4.50"
250-021779
250-021781
290-002496
.50x3.06x6.50"
900-091513
250-014872
2 PLCS
250-029803
250-035581
290-016500
.31x4.00"
250-022713
250-014428
290-001543
.50x3.50"
290-002485
.50x3.06x4.25"
290-001528
.50x2.00"
250-010093
290-022792
CRG .31x3.50"
290-002608
.38 NAR
250-022713
250-027560
250-033163
290-002608
290-002635
290-002556
300-029265
250-023722
250-023921
250-011535
290-001616
.56x3.50"
250-023726
250-023719
250-027064
250-014428
250-028448
250-032136
290-001543
.50x3.50"
290-002485
.50x3.06x4.25"
250-027560
250-032134
290-017771
.25X1.00" SCREW
250-016376
250-011535
290-011847
.38x1.25"
250-028449
250-032137
250-022257
250-028364
250-032127
250-032130
250-023716
290-023740
WSHR ENDR
290-011847
.38x1.25"
250-023715
250-033171
250-032131
300-031652
ST215/75R14C
290-031564
.50" LUGNUT
★ INDICATES CHANGE ON EFFECTIVE DATE
DESCRIPTION:
TA96BT 21-25 6200#
EZ LOADER
BOAT TRAILERS
PROPRIETARY AND CONFIDENTIAL INFORMATION
EFFECTIVE DATE:
07-01-21
ECN:
1225
BASE NUMBER:
K*TAXSG