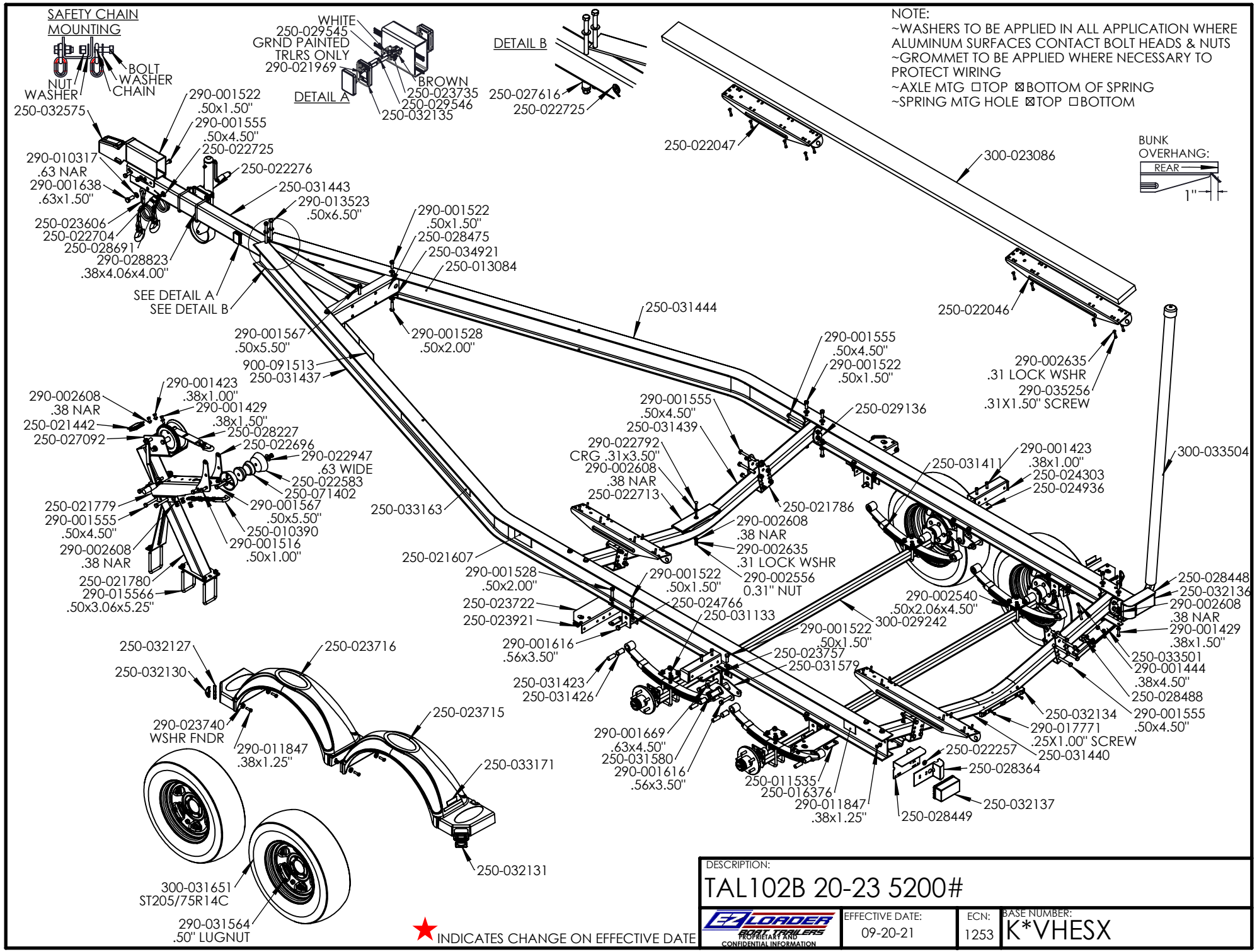
SAFETY CHAIN MOUNTING
BOLT
WASHER
CHAIN
NUT
WASHER
WHITE
250-029545
GRND PAINTED
TRLRS ONLY
290-021969
BROWN
250-023735
250-029546
250-032135
DETAIL A
DETAIL B
250-027616
250-022725
NOTE:
~WASHERS TO BE APPLIED IN ALL APPLICATION WHERE ALUMINUM SURFACES CONTACT BOLT HEADS & NUTS
~GROMMET TO BE APPLIED WHERE NECESSARY TO PROTECT WIRING
~AXLE MTG ☐TOP ☒BOTTOM OF SPRING
~SPRING MTG HOLE ☒TOP ☐BOTTOM
BUNK OVERHANG:
REAR
1"
250-022047
300-023086
250-032575
290-001522
.50x1.50"
290-001555
.50x4.50"
250-022725
290-010317
.63 NAR
290-001638
.63x1.50"
250-022276
250-031443
290-013523
.50x6.50"
250-023606
250-022704
250-028691
290-028823
.38x4.06x4.00"
SEE DETAIL A
SEE DETAIL B
290-001522
.50x1.50"
250-028475
250-034921
250-013084
250-031444
250-022046
290-001567
.50x5.50"
290-001528
.50x2.00"
900-091513
250-031437
290-001555
.50x4.50"
290-001522
.50x1.50"
290-002635
.31 LOCK WSHR
290-035256
.31X1.50" SCREW
290-002608
.38 NAR
290-001423
.38x1.00"
290-001429
.38x1.50"
250-021442
250-027092
250-028227
250-022696
290-022947
.63 WIDE
250-022583
250-071402
290-001555
.50x4.50"
250-029136
250-031439
290-022792
CRG .31x3.50"
290-002608
.38 NAR
250-022713
250-031411
290-001423
.38x1.00"
250-024303
250-024936
300-033504
250-021779
290-001555
.50x4.50"
290-002608
.38 NAR
250-021780
290-015566
.50x3.06x5.25"
290-001567
.50x5.50"
250-010390
290-001516
.50x1.00"
250-033163
250-021786
290-002608
.38 NAR
290-002635
.31 LOCK WSHR
290-002556
0.31" NUT
250-021607
290-001528
.50x2.00"
290-001522
.50x1.50"
250-023722
250-023921
250-024766
250-031133
290-002540
.50x2.06x4.50"
300-029242
250-028448
250-032136
290-002608
.38 NAR
290-001429
.38x1.50"
290-001522
.50x1.50"
290-001616
.56x3.50"
250-023757
250-031579
250-031423
250-031426
250-033501
290-001444
.38x4.50"
250-028488
250-032127
250-032130
250-023716
290-023740
WSHR FNDR
290-011847
.38x1.25"
250-023715
250-033171
290-001669
.63x4.50"
250-031580
290-001616
.56x3.50"
250-032134
290-017771
.25X1.00" SCREW
250-031440
290-001555
.50x4.50"
250-022257
250-028364
250-011535
250-016376
290-011847
.38x1.25"
250-028449
250-032137
250-032131
300-031651
ST205/75R14C
290-031564
.50" LUGNUT
INDICATES CHANGE ON EFFECTIVE DATE
DESCRIPTION:
TAL102B 20-23 5200#
EZ LOADER
BOAT TRAILERS
PROPRIETARY AND CONFIDENTIAL INFORMATION
EFFECTIVE DATE:
09-20-21
ECN:
1253
BASE NUMBER:
K*VHESX