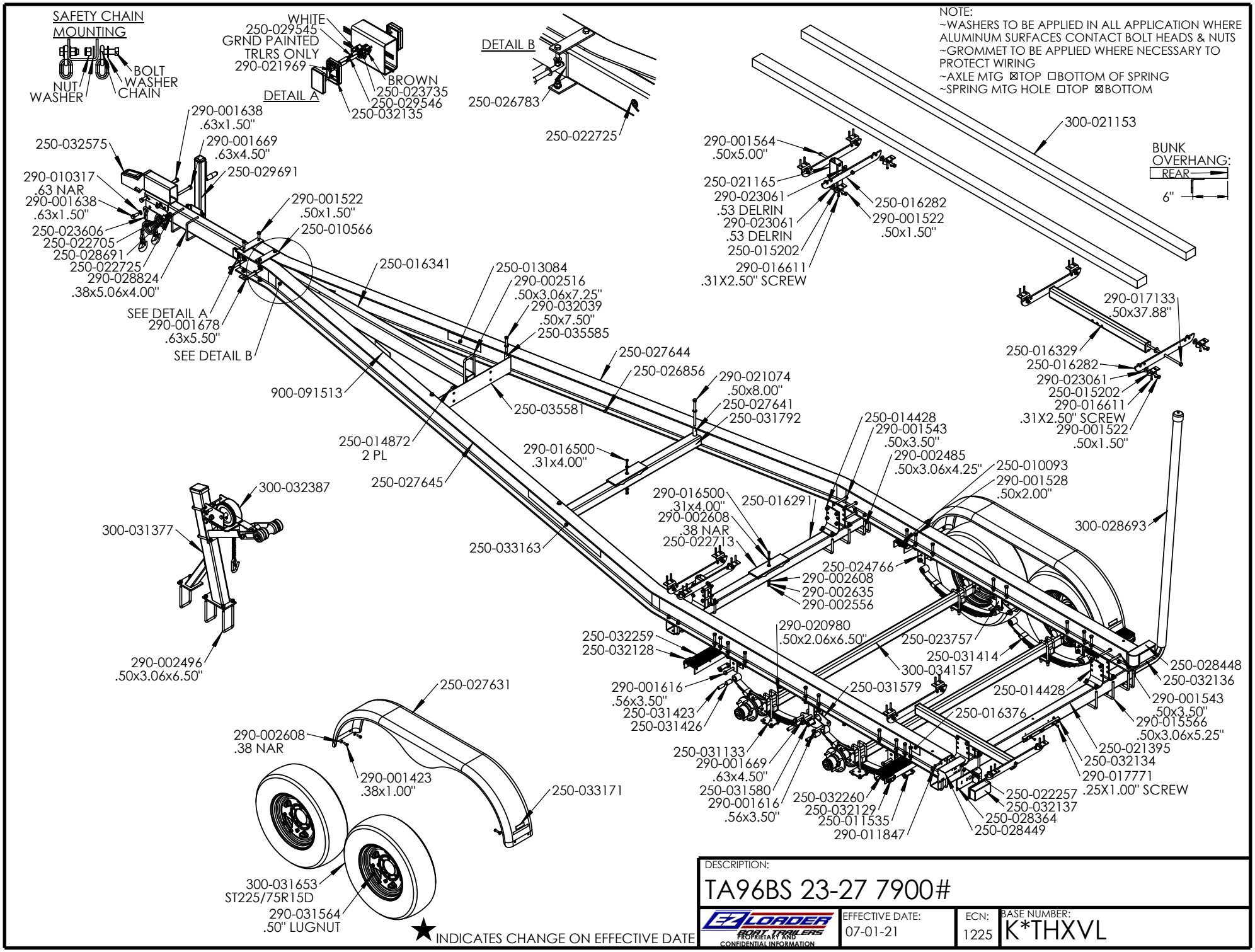

DESCRIPTION:

TA96BS 23-27 7900#

EZ LOADER BOAT TRAILERS PROPRIETARY AND CONFIDENTIAL INFORMATION	EFFECTIVE DATE: 07-01-21	ECN: 1225	BASE NUMBER: K*THXVL