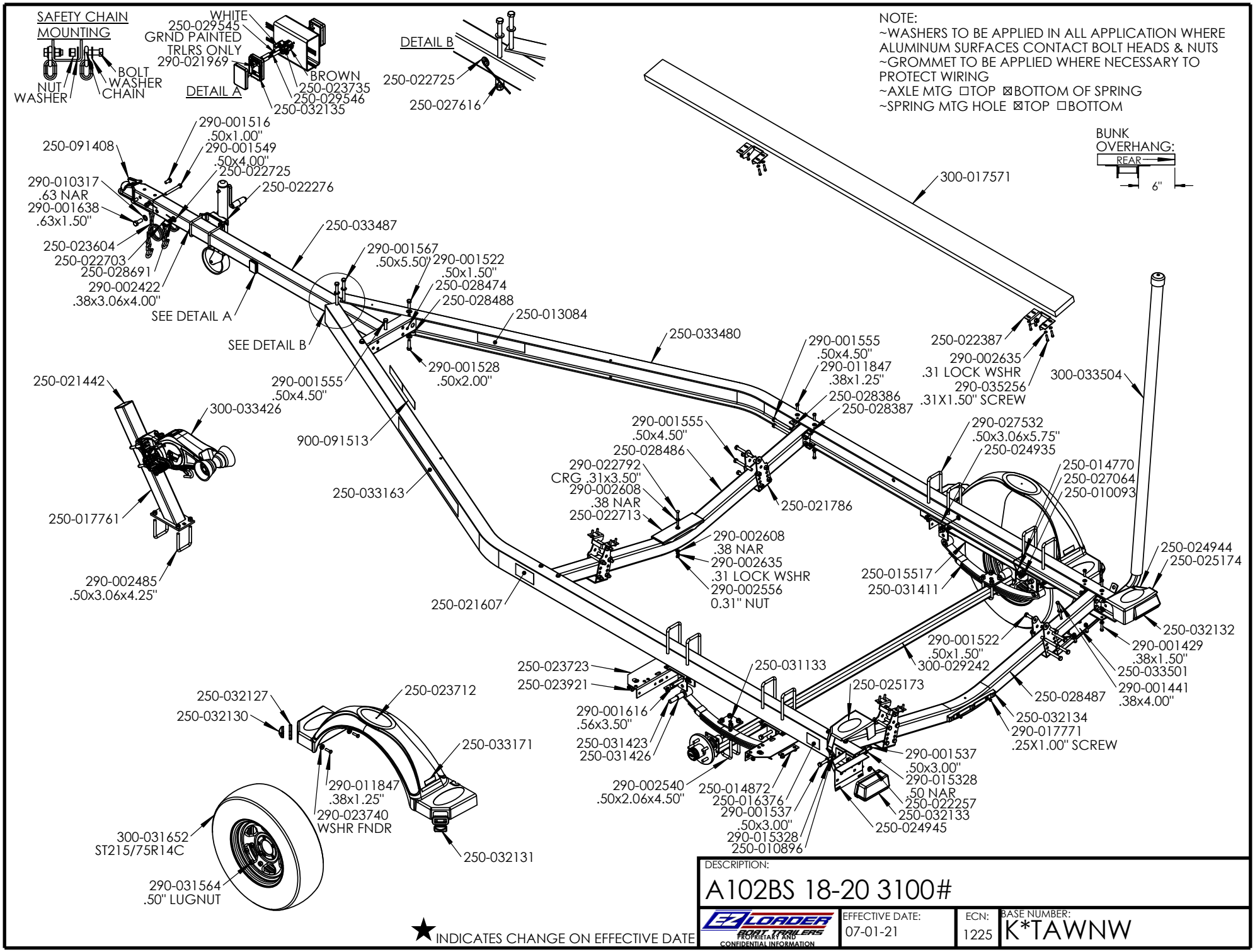

★ INDICATES CHANGE ON EFFECTIVE DATE

DESCRIPTION:			
A102BS 18-20 3100#			
EZ LOADER BOAT TRAILERS PROPRIETARY AND CONFIDENTIAL INFORMATION	EFFECTIVE DATE: 07-01-21	ECN: 1225	BASE NUMBER: K*TAWNW