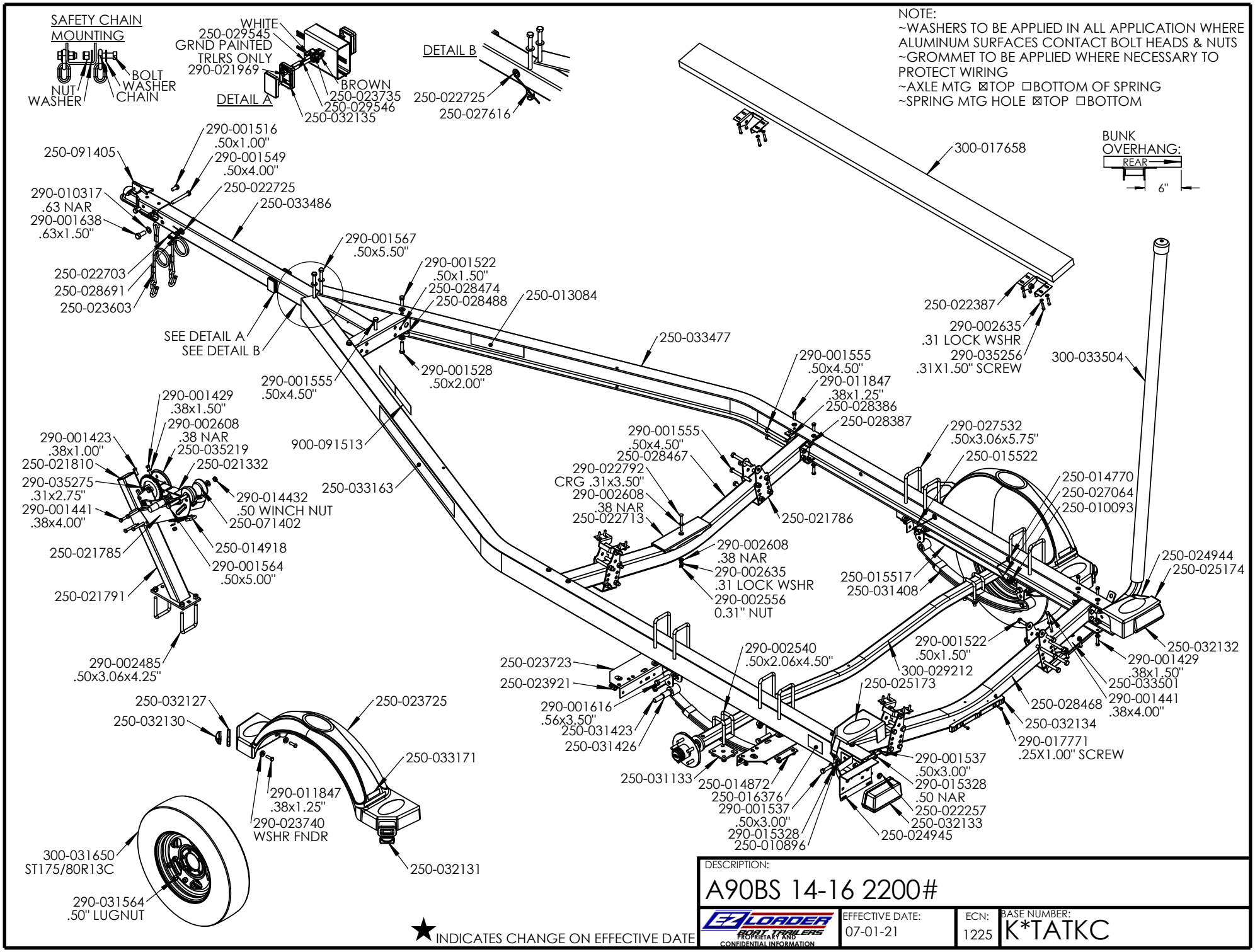

★ INDICATES CHANGE ON EFFECTIVE DATE

DESCRIPTION:

A90BS 14-16 2200#

EZ LOADER BOAT TRAILERS

PROPRIETARY AND CONFIDENTIAL INFORMATION

EFFECTIVE DATE:	ECN:	BASE NUMBER:
07-01-21	1225	K*TATKC