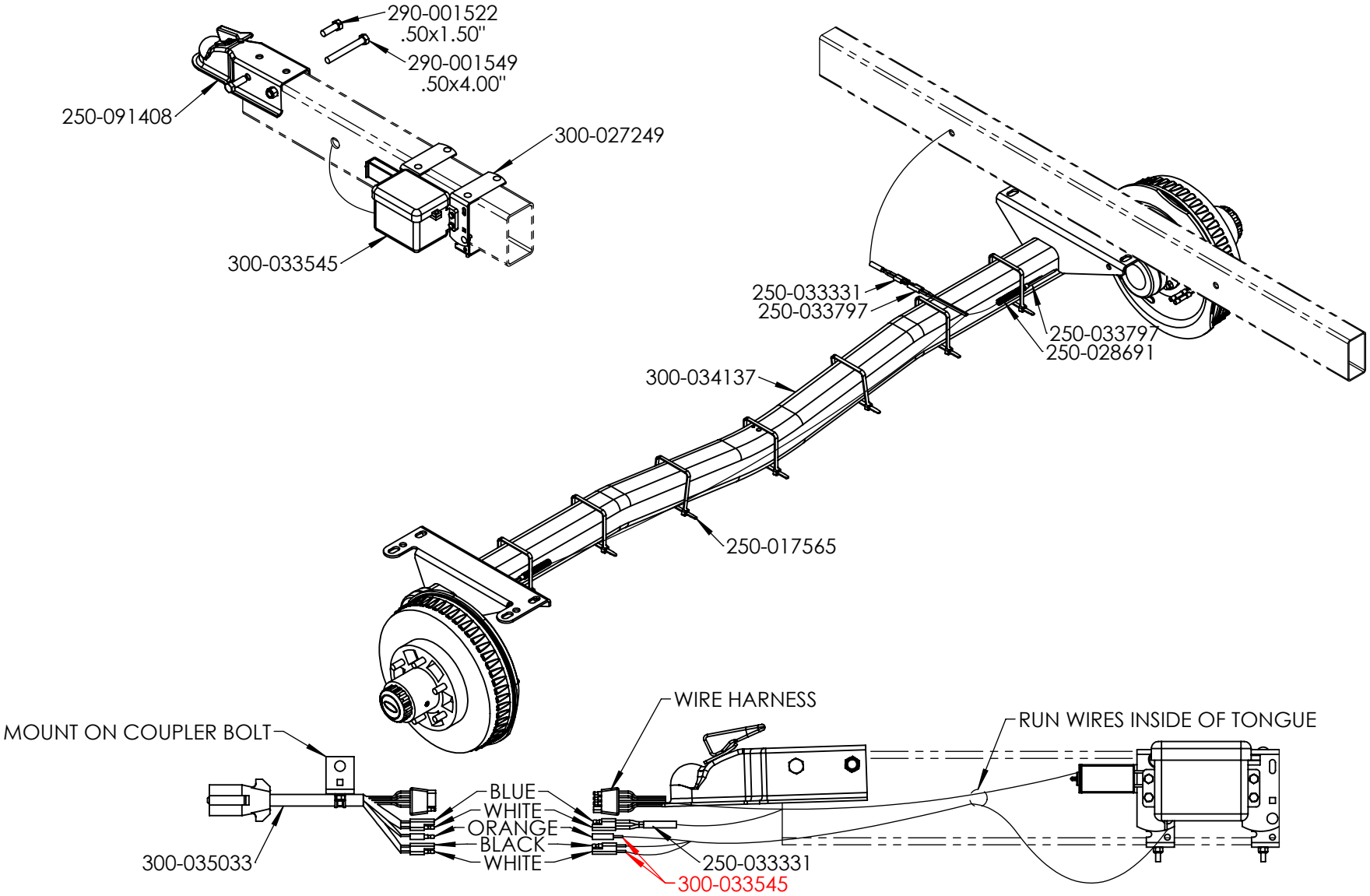

★INDICATES CHANGE ON EFFECTIVE DATE

NOTE:
SEE ELECTRIC BRAKE WIRING INFO PAGE

DESCRIPTION:			PART #:
ELE DRUM 1X96" WIDE 5000GVWR TORSION 5" TNG			400-036115
EZ LOADER BOAT TRAILERS PROPRIETARY AND CONFIDENTIAL INFORMATION	EFFECTIVE DATE: 10-05-20	ECN: 1166	