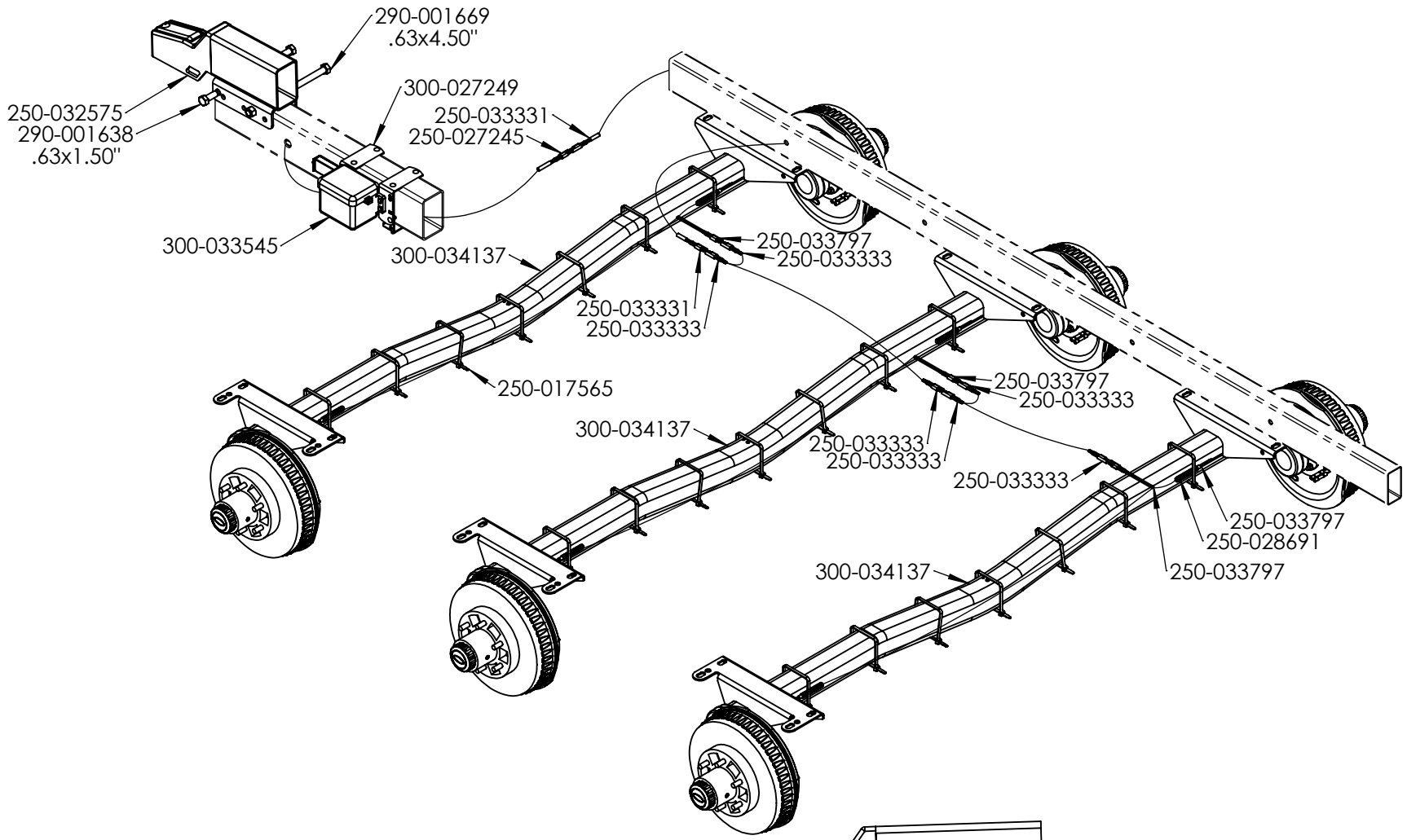

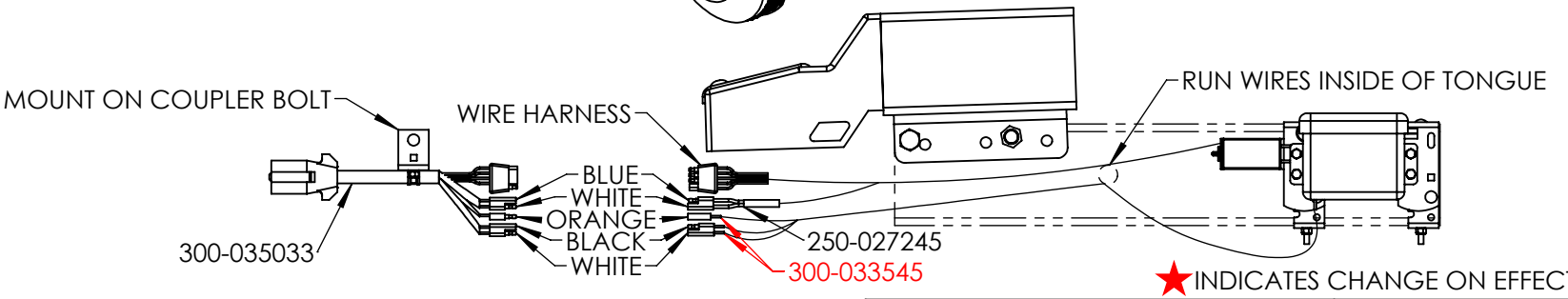

★ INDICATES CHANGE ON EFFECTIVE DATE

NOTE:
SEE ELECTRIC BRAKE WIRING INFO PAGE

DESCRIPTION:	PART #:
ELE DRUM 3X96" WIDE 16500GVWR TORSION W/ 6' HARN EXT 5" TNG TRIPLE	400-036093

EZ LOADER BOAT TRAILERS
PROPRIETARY AND CONFIDENTIAL INFORMATION

EFFECTIVE DATE:	ECN:
10-05-20	1166