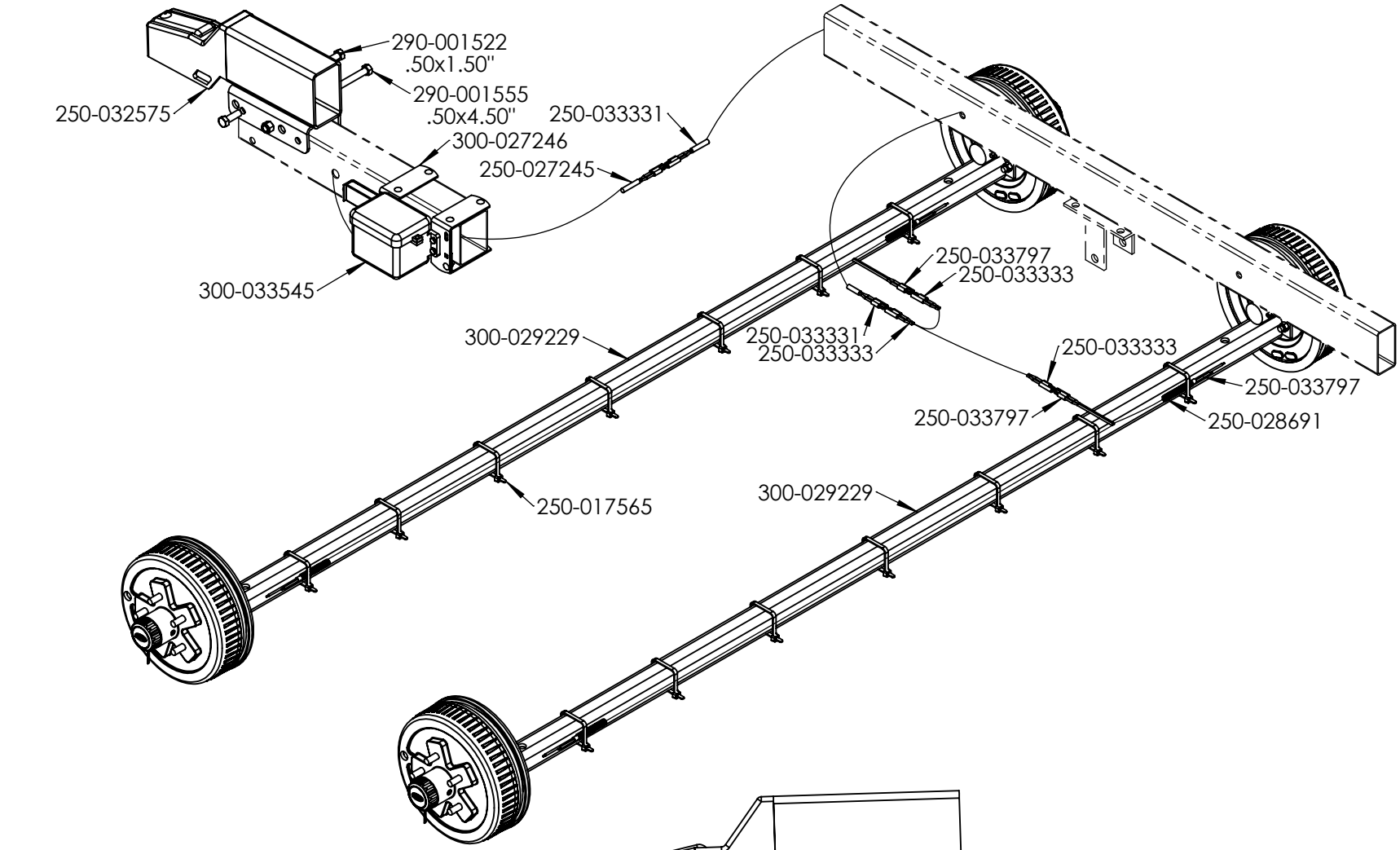

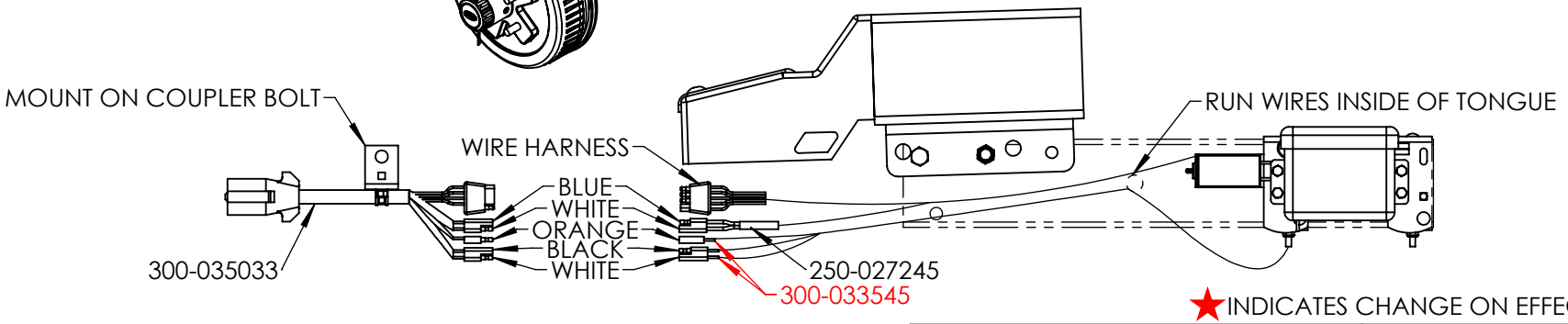

★ INDICATES CHANGE ON EFFECTIVE DATE

NOTE:
SEE ELECTRIC BRAKE WIRING INFO PAGE

DESCRIPTION:			PART #:
ELE DRUM 2X100" WIDE 7480GVWR STR SPRING 4" TNG TANDEM			400-036091
EZ LOADER BOAT TRAILERS PROPRIETARY AND CONFIDENTIAL INFORMATION	EFFECTIVE DATE: 10-05-20	ECN: 1166	