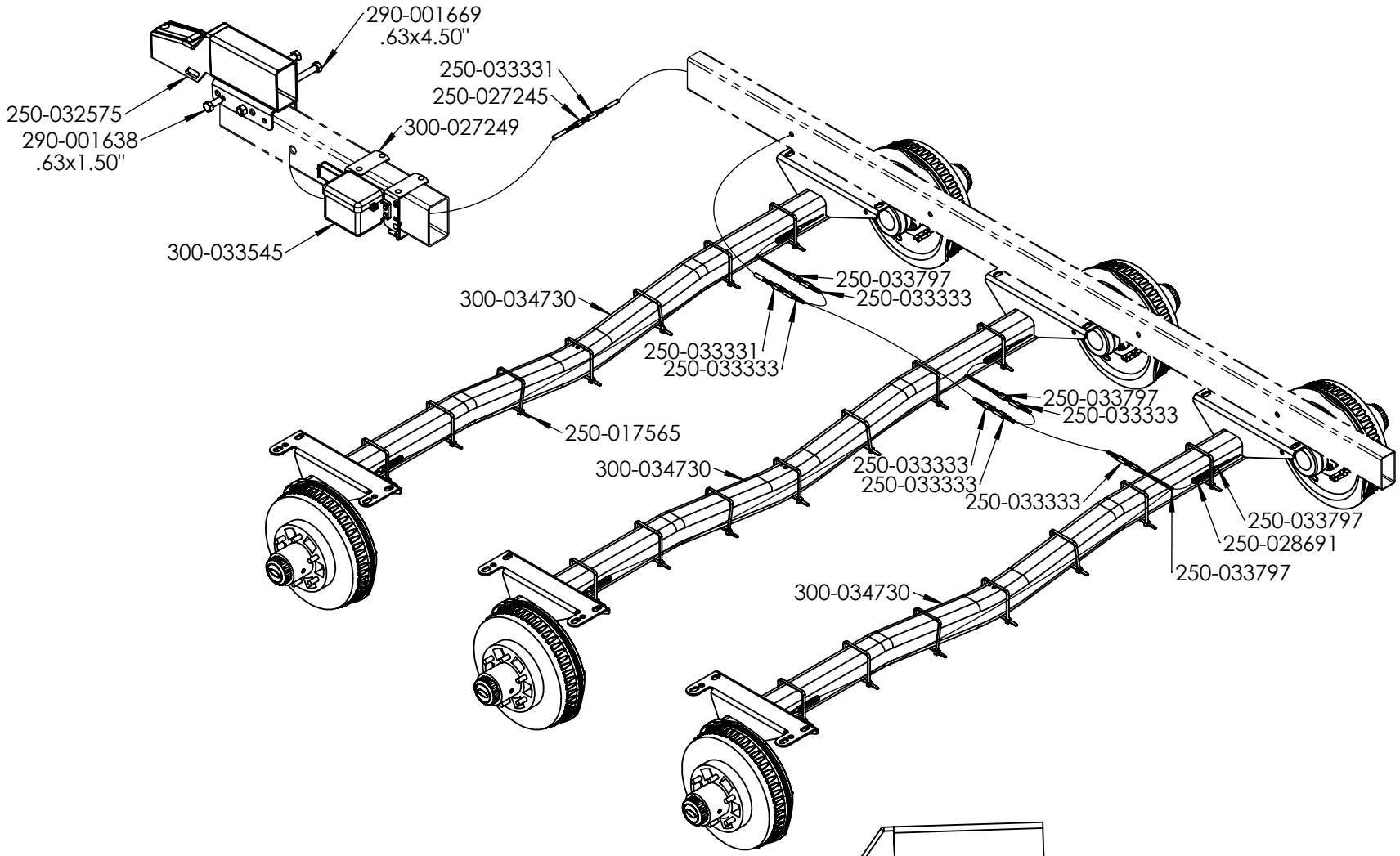

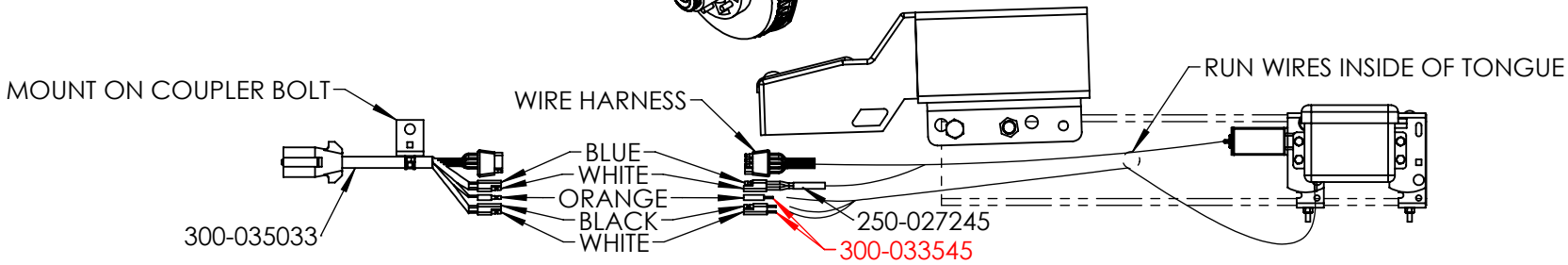

★ INDICATES CHANGE ON EFFECTIVE DATE

NOTE:
SEE ELECTRIC BRAKE WIRING INFO PAGE

DESCRIPTION:			PART #:
ELE DRUM 3X102" WIDE 16500GVWR TORSION 5" TNG TRIPLE			400-035953
EZ LOADER BOAT TRAILERS PROPRIETARY AND CONFIDENTIAL INFORMATION	EFFECTIVE DATE: 10-05-20	ECN: 1166	