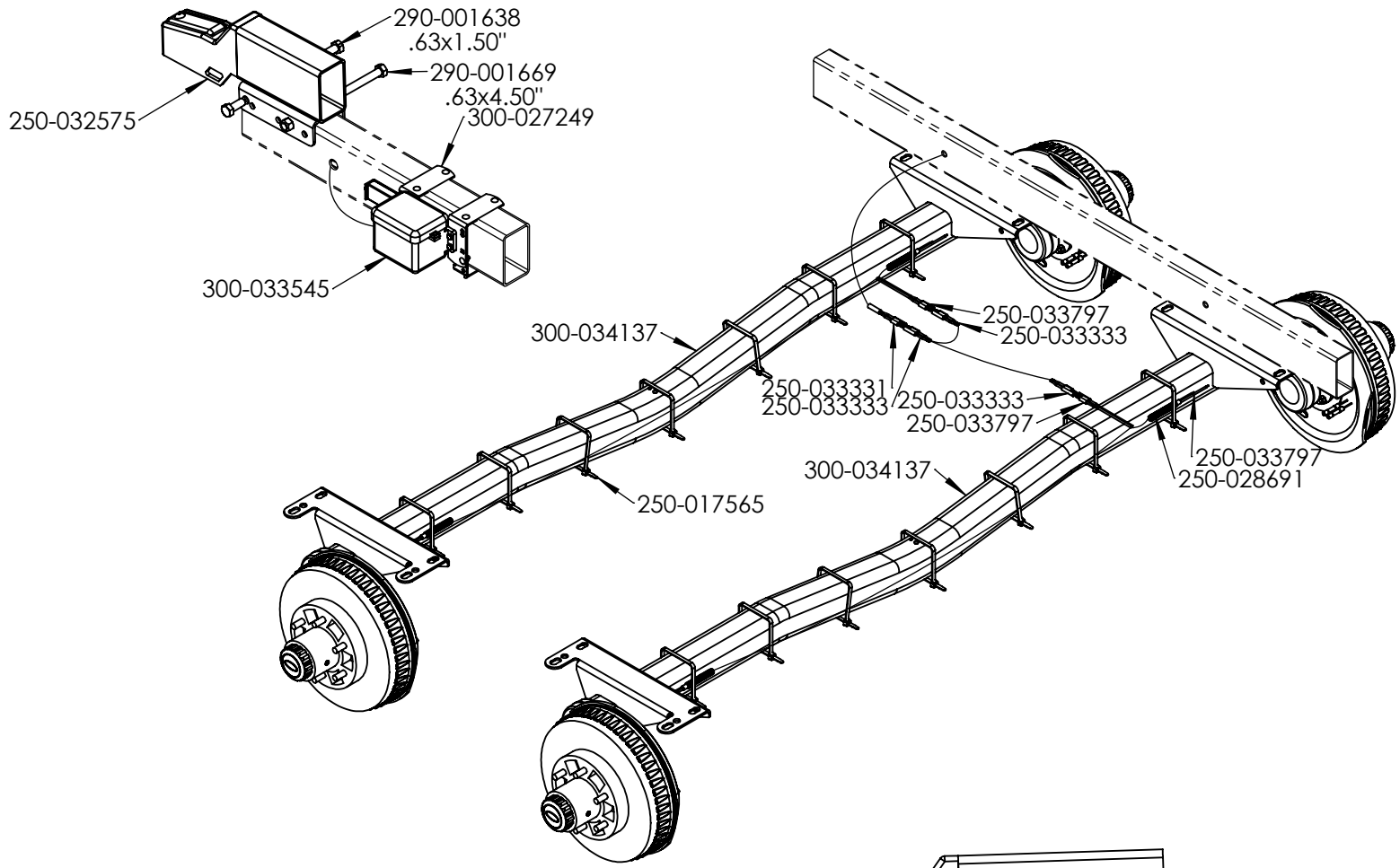

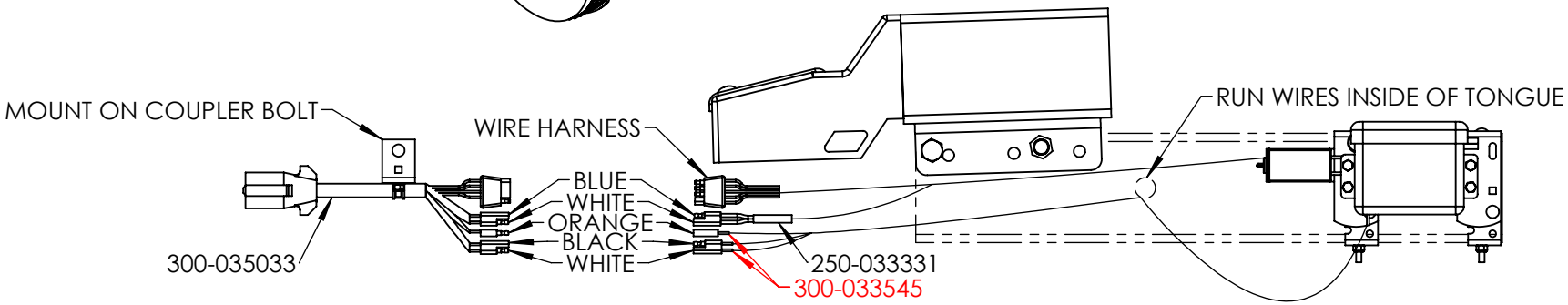

★ INDICATES CHANGE ON EFFECTIVE DATE

NOTE:
SEE ELECTRIC BRAKE WIRING INFO PAGE

DESCRIPTION:			PART #:
X ELE DRUM 2X96" WIDE 11000GVWR TORSION 5" TNG TANDEM			400-035845
EZ LOADER BOAT TRAILERS PROPRIETARY AND CONFIDENTIAL INFORMATION	EFFECTIVE DATE: 10-05-20	ECN: 1166	