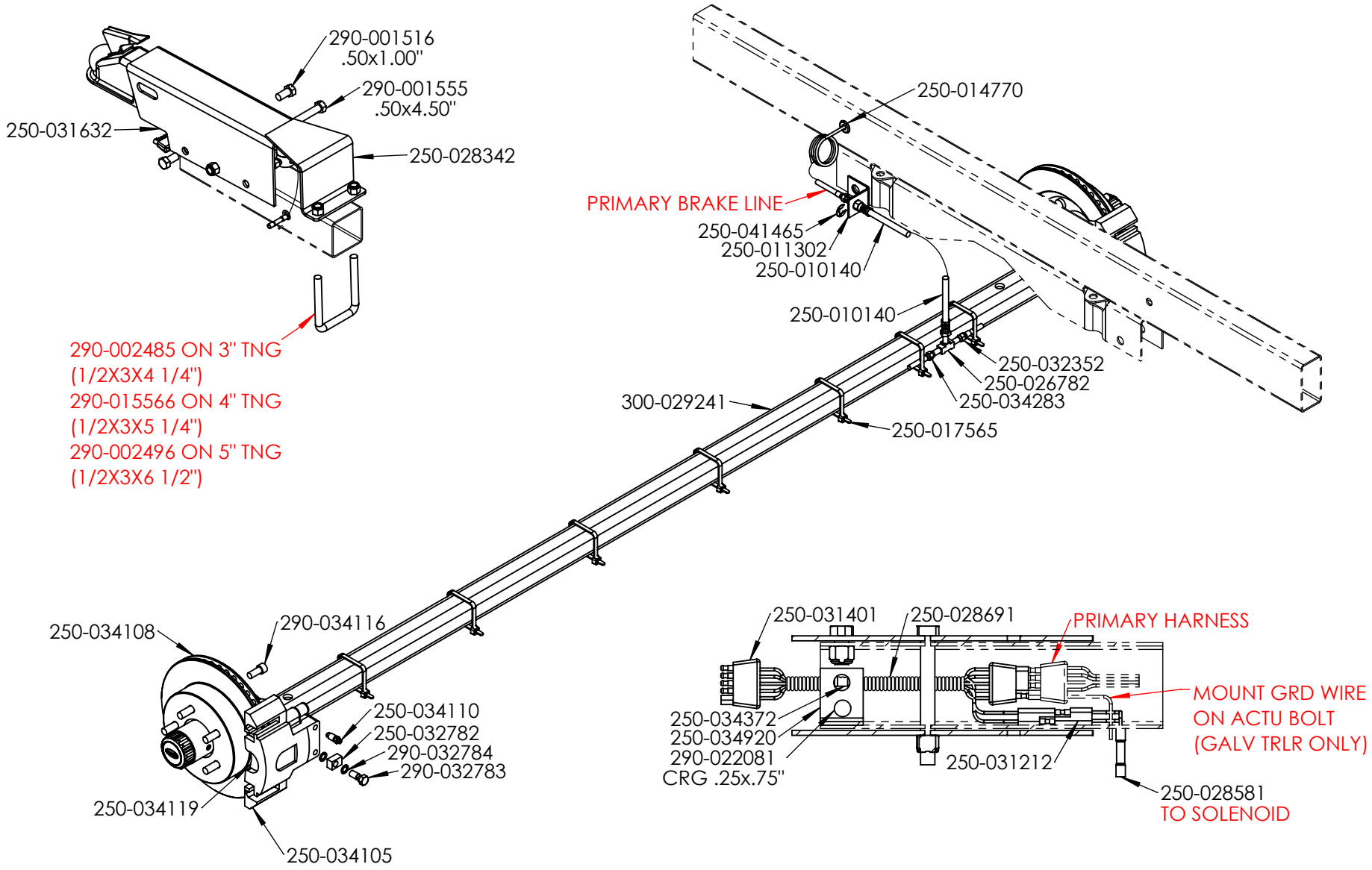

NOTE:
~APPLY 250-033537 COPPER GASKETS TO ALL FLARED FITTINGS
~SEE UFP DISC BRAKE INFO PAGE

★INDICATES CHANGE ON EFFECTIVE DATE

DESCRIPTION:			PART #:
HYD DISC 1X96" WIDE 3500GVWR STR SPRING			400-035741
EZ LOADER BOAT TRAILERS PROPRIETARY AND CONFIDENTIAL INFORMATION	EFFECTIVE DATE: 10-05-20	ECN: 1166	