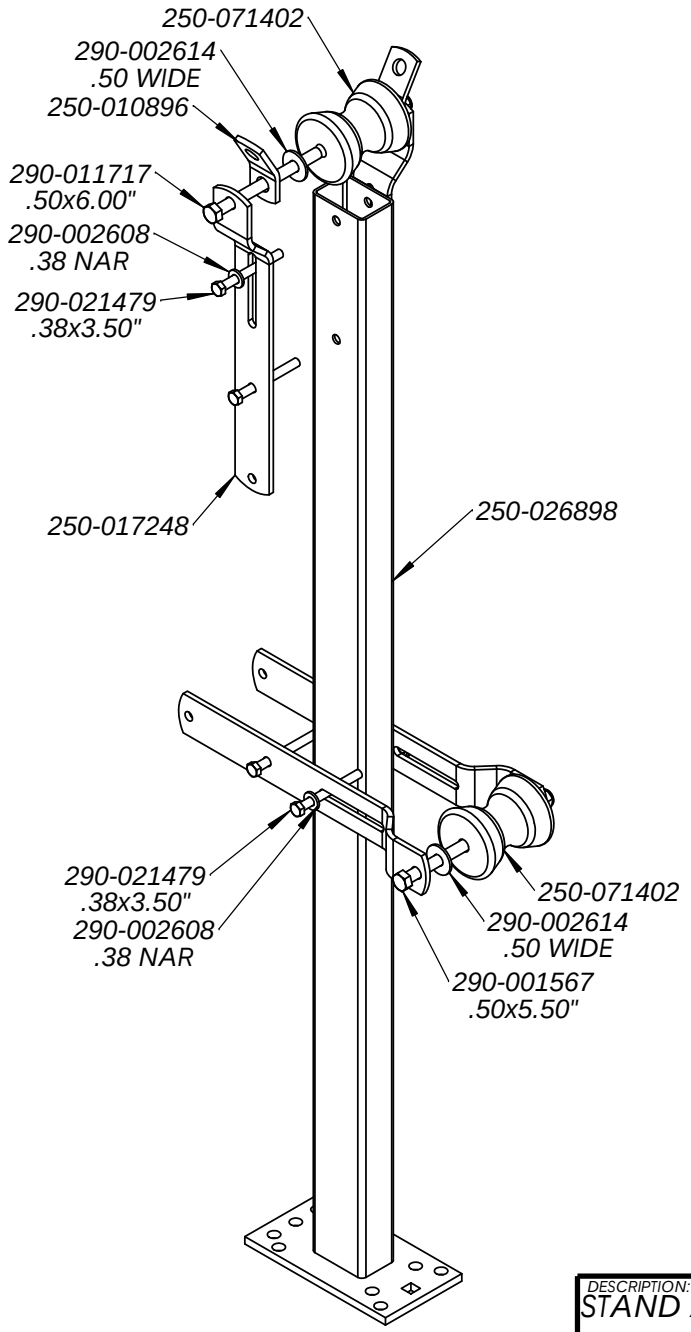

★INDICATES CHANGE ON EFFECTIVE DATE

DESCRIPTION:			PART #:
STAND ASM CAT MAST CARRIER			300-026899
EZ LOADER BOAT TRAILERS PROPRIETARY AND CONFIDENTIAL INFORMATION	EFFECTIVE DATE: 04-09-01	ECN: NONE	